PHILIPS

Operating instructions
Bedienungsanleitung
Mode d'emploi
Gebruiksaanwijzing
Istruzioni per l'uso
Instrucciones de manejo
Bruksanvisning

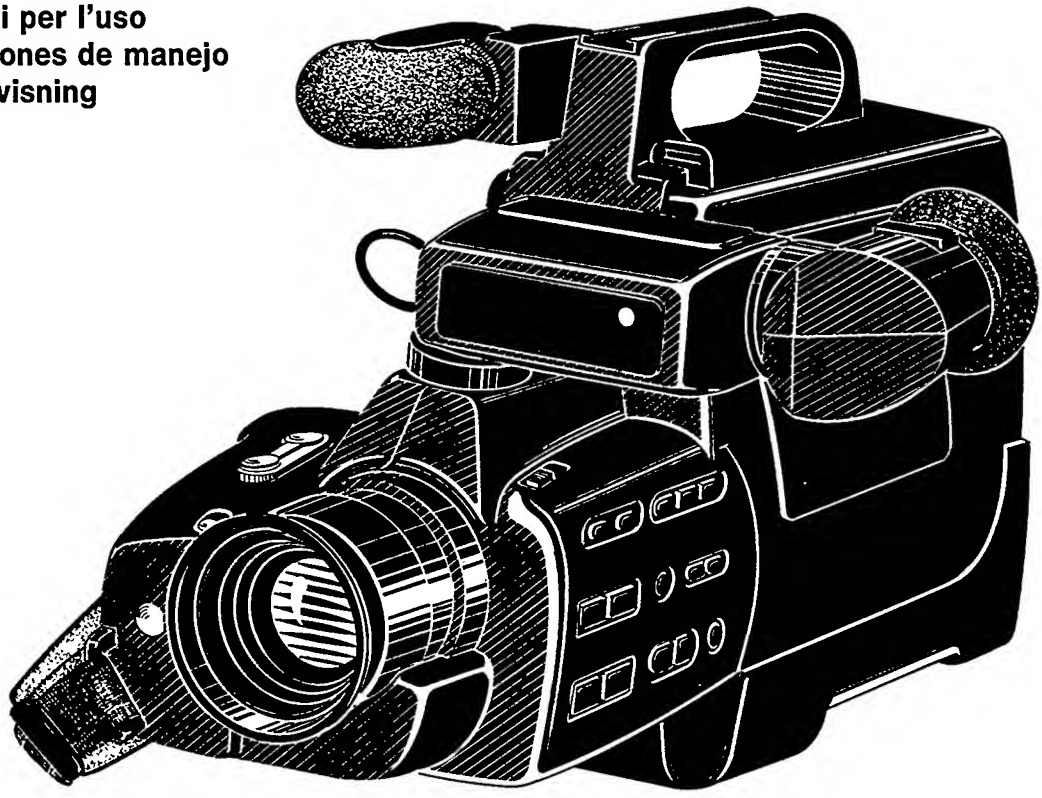

EXPLORER
CAMCORDERS

VKR6860

Contents

Major features 3
Important 3
Precautions 4
Camcorder's accessories 5
Controls and connectors 6
Viewfinder display 8
Basic preparations 9
- Mounting the viewfinder 9
- Positioning the viewfinder 9
- Dioptric adjustment 9
- Using the viewfinder in other position 9
- Removing the viewfinder 9
- Hand-grip strap adjustment 10
- Attaching the carrying strap 10

Power supply system 10
- Battery pack (SBC5215) 10
- AC adaptor (SBC5440) 11

Setting the date and time 12
- How to insert the battery for clock operation 12
- Date/time setting 12

Video cassette 13
- Inserting the video cassette 13
- Removing the video cassette 13
- Storage of cassettes 13

Recording 14
- Full auto recording 14
- Animation recording 15
- Self-timer recording 16
- Time-lapse recording 17
- Second recording START/STOP button 18
- Fixing the lens cap 18
- Monitor mode 18

Advanced videography techniques 19
- Focus 19
- Zooming 20
- Macro close-up 20
- White balance 21
- High speed shutter 21
- Iris 22
- BLC (Back Light Compensation) 22
- Date/time recording 22
- PSU (Personal Set Up) memory 23
- Microphone sensitivity select switch 23
- Fader 24
- Assemble recording 25
- Retake 25

Playback 26
- Playback 26
- Picture search 26
- Still playback 26
- Frame advance 27
- Tracking 27

Connection for playback 28
Used time display and counter memory 29
- Used time display 29
- Counter memory 29

Editing techniques 30
- Insert editing 30
- Audio dubbing 31
- Tape dubbing 32

Supplemental information 33
- What is "Colour temperature"? 33
- What is "White balance"? 33
- What is "illuminance"? 33
- How to get good colour pictures 33

Optional accessaries 34
- VITC generator IHP6805/02 34
- Character generator 22AV5156 35
- External microphone SBC3070 35
- Tripod mounting 35

In case of difficulty 36
Specifications 37

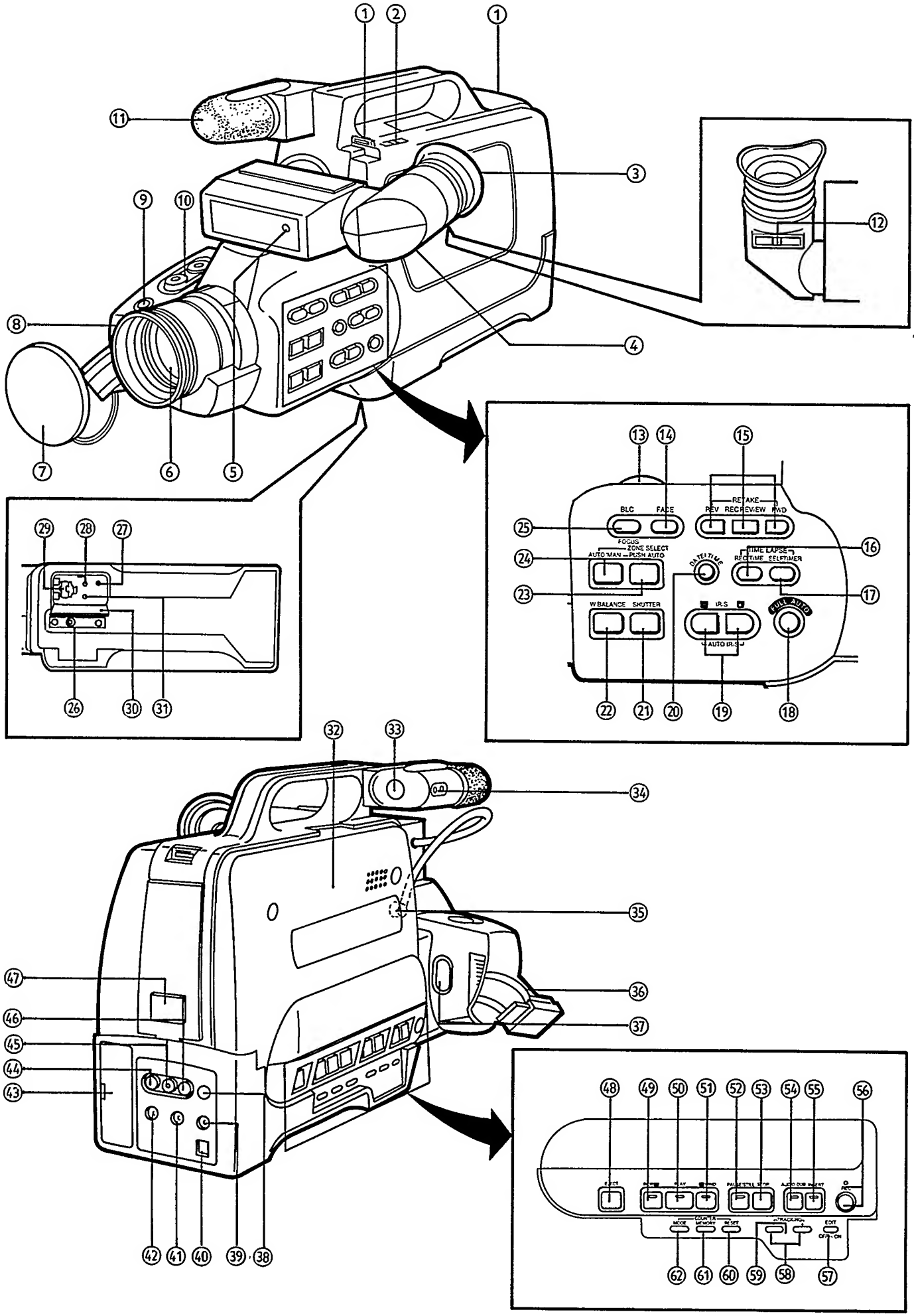
BLC
FADE
RETAKE
REV
REC REVIEW
FWD
FOCUS
ZONE SELECT
AUTO MAN
PUSH AUTO
TIME LAPSE
REC TIME
SELF TIMER
DATE TIME
W.BALANCE
SHUTTER
IRIS
AUTO IRIS
FULL AUTO
EJECT
REW
PLAY
FWD
PAUSE/STILL
STOP
AUDIO DUB
INSERT
MODE
COUNTER MEMORY
RESET
TRACKING
EDIT
OFF ON

Errata

English

Insert editing (Page 30)
[Correction]
Replacing pictures on a pre-recorded tape with new scenes.

Deutsch

Insert-Schnit (Seit 30)
[Berichtigung]
Unter Insert-schnitt versteht man das Ersetzen von Bild auf einem bespielten Band durch neues Bildmaterial.

Français

Montage par insertion (Page 30)
[Correction]
Remplacement des images sur une bande enregistrée par des scènes nouvelles.

Nederlands

Inlassen van opnamen (blz. 30)
[Correctie]
Het vervangen van eerder opgenomen beelden door nieuwe scenes.

Italiano

Montaggio di inserimento (Pag. 30)
[Correzione]
Sostituzione delle immagini di un nastro preregistrato con nuove scene.

Español

Montaje de inserciones (Página 30)
[Corrección]
Cambio de imágenes de una cinta grabada por otras imágenes nuevas.

Svenska

Tillaggsinspelning (Sldan 30)
[Korrektion]
Ersätta bild på ett förinspelat band med nya scener.

Major features

- **High resolution 1/2" Frame Interline Transfer (FIT) type CCD with 420,000 pixels delivering pictures with a horizontal resolution of more than 240 line.**
- **10X power zoom lens with macro position.**
- **Selectable shutter speed : 1/2000, 1/1000, 1/500, 1/250, 1/125 and 1/50**
- **Quick inner lens full range auto focusing.**
- **Auto tracking.**
- **Timer function (self timer, time lapse, animation).**
- **Twin rec-trigger system for comfortable shooting in any position.**
- **Wide viewfinder screen with the 0.9" CRT.**
- **Editing functions (video insert, audio dubbing).**

Important

English

■ **Do not remove the outer cover**
To prevent electric shock, do not remove the cover. No user serviceable parts inside. Refer servicing to qualified service personnel.

■ **Warning**
To reduce the risk of fire or electrical shock, do not expose this equipment to rain or moisture.

■ **Warning on battery pack**
Danger of explosion if battery is incorrectly replaced. Replace only with the same or equivalent type recommended by the equipment manufacturer. Discard used batteries according to manufacturer's instructions.

■ **Warning on lithium battery**
The battery used in this device may present a fire or chemical burn hazard if mistreated. Do not recharge, disassemble, heat above 100°C or incinerate. Replace battery with CR2032, use of another battery may present a risk of fire or explosion.

- Dispose of the used battery promptly according to manufacturer's instructions.
- Keep away from children. If the battery is swallowed, consult a doctor immediately.
- Do not disassemble and do not dispose of in fire.

■ **Camcorder**
The rating plate is on the bottom side of the Camcorder.

■ **AC adaptor**
The rating plate is on the bottom side of the unit. This model conforms to the EC directive (for radio interference) 87/308/EEC.

Important (In the United Kingdom)

Mains supply (240 V AC, 50 Hz only)
The wires in the mains lead are coloured in accordance with the following code:

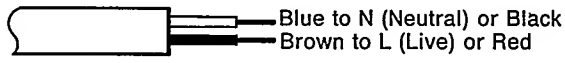

If these colours do not correspond with the terminal identifications in your plug, connect as follows:
Blue wire to terminal coded N (Neutral) or colour coded Black.
Brown wire to terminal coded L (Live) or colour coded Red. Do not make any connection to the larger terminal coded E or Green. If in doubt, consult a competent electrician.
If the mains plug (or adaptor) contains a fuse, this should have a value of 3A. If a plug without a fuse is used, the fuse at the distribution board should not be greater than 5A.

■ **Copyright laws**
Your attention is drawn to the fact that recording of pre-recorded tapes or discs or other published or broadcast material may infringe copyright laws.

Precautions

Please read these cautions before operating the Camcorder, so that you will obtain the best results from your Camcorder.

Moisture condensation
Moving the Camcorder from a cold place to a warm place may cause moisture condensation inside the unit. Under these conditions, the cassette tape may stick to the head drum, damaging the head drum or causing the system to malfunction. To prevent the problems associated with moisture condensation, do not use the Camcorder for approximately 1 hour after moving it from a cold place to a warm place.

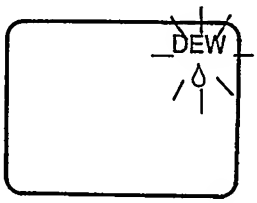

Dew indicator

The dew indicator will blink in the viewfinder if there is moisture present in the unit. If there is a cassette in the unit, automatic eject will follow. Remove the cassette and turn off the power and do not use them for at least one hour.
In case you don't switch off, the unit will switch itself off within 5 minutes.
The Camcorder can be used again if the dew indicator does not appear in the viewfinder when the power is turned on.

Protect the Camcorder from humidity and dust.

Surrounding conditions
Use the Camcorder under conditions where the temperatures are between 0°C and 40°C and where the humidity is between 20% and 80%.
To avoid deformation of the outer case or other damage, do not leave it exposed to direct sunlight for any length of time, also never leave it in a closed automobile.

Keep the Camcorder away from heaters.

Keep the Camcorder away from TV sets
Do not place the Camcorder near a TV set because it might impair the picture and sound quality of the recorded tape, and/or adversely affect the performance of the Camcorder.

Keep magnets away
Never bring a magnet or magnetized object such as a fluorescent lamp, motor, electric clock or battery operated toy etc., close to the Camcorder because this could adversely affect its performance.

Keep the Camcorder away from areas with strong electric fields
The picture may become distorted, when the Camcorder is used in places with strong electric fields, such as near TV or radio antennas.

Keep the Camcorder away from strong light
Do not expose the Camcorder to strong light, because the heat from it may cause deformation or other damage.

Keep insecticide spray away
Never spray things like insecticide on the lens and body of the Camcorder. Also, never leave rubber or vinyl objects in contact with any part of it for a long time, as the colour might change and the body surface might be damaged.

Never put any foreign object inside
Never insert any object other than a video cassette into the Camcorder. If any object is dropped into it or if any liquid is spilled into it, consult qualified service personal. Operating it with foreign matter inside may cause fire or electric shock.

Handle with care
Never drop the Camcorder or expose it to strong physical shocks. Shocks during use may result in abnormal operation and performance.

Never place the Camcorder with the cassette compartment side facing down
Never use the Camcorder with the cassette compartment side facing down as this might cause uneven winding and slacking of the tape.

Cover the lens with the cap after shooting.

When the Camcorder is not being used
Remove the video cassette and turn the Camcorder off using the power switch.

Cleaning the Camcorder
The body of the Camcorder is made of plastic materials. Never use benzine, thinner or other chemicals for cleaning, because the colour might be changed and the case surface might be damaged.
Wipe the case and operation panel with a soft clean cloth. For persistent stains, use a cloth moistened with mild detergent and water, and then wipe with a dry cloth. Clean the lens only with a blower brush (used for photo cameras) or a special lens cleaning tissue (used for glasses and cameras).

Camcorder's accessories

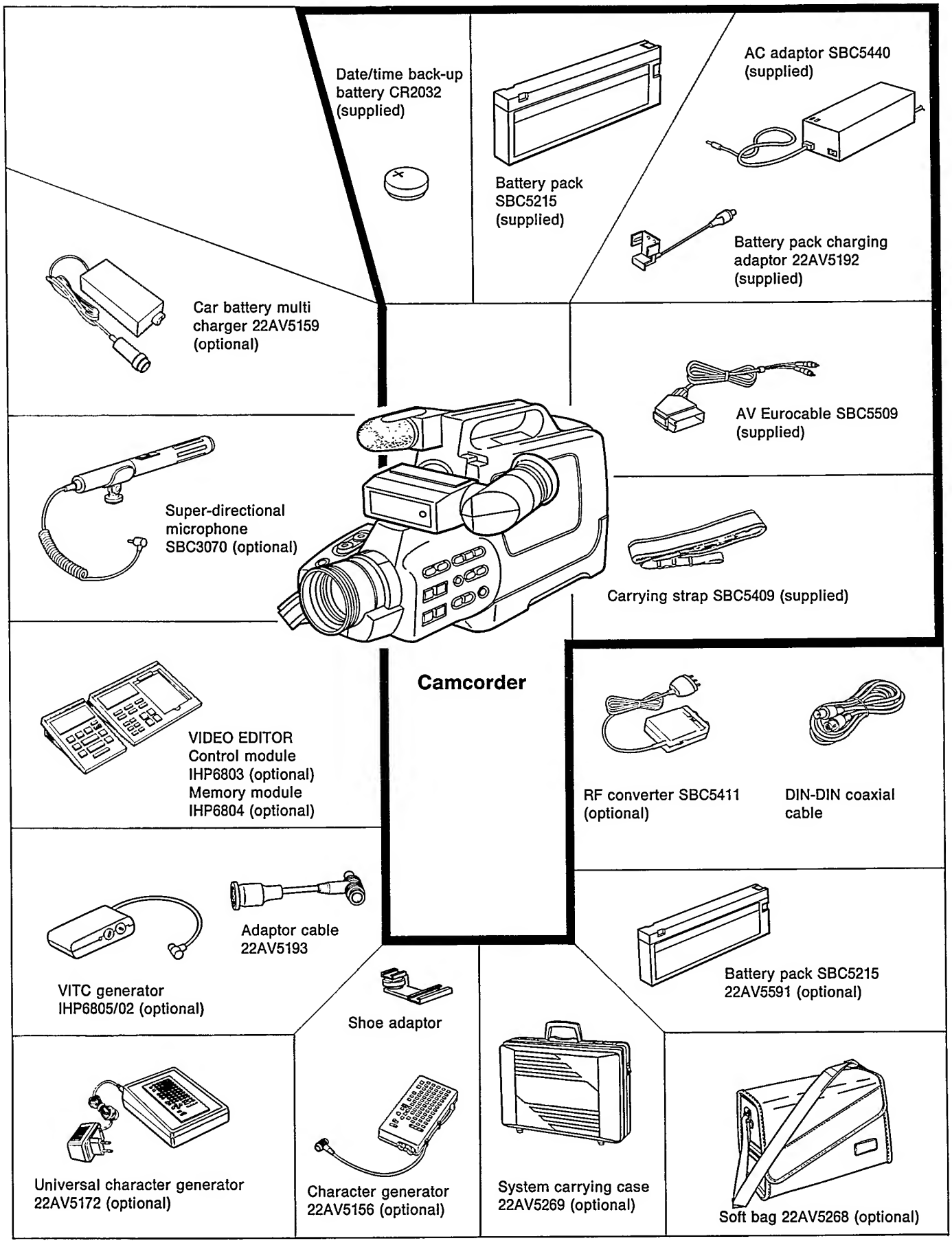

Controls and connectors

① **Carrying strap eyelets**
For attaching the carrying strap.

② **POWER switch and indicator**
To turn the power on and off.

③ **Eyepiece**

④ **EVF (Electronic ViewFinder)**
To monitor the recording and playback picture. Also shows the operation modes.

⑤ **Tally**
To indicate the recording mode.

⑥ **Lens**

⑦ **Lens cap**

⑧ **Auto white balance detection window**
To sense the colour temperature. Do not cover this window.

⑨ **2nd recording start/stop button**
To start recording from record pause mode or to enter record pause mode from recording mode when shooting from low angle etc..

⑩ **Power zoom button**
To control the telephoto " T " zooming or wide range " W " zooming.

⑪ **Microphone**
Records sound onto the video tape.

⑫ **Dioptric adjustment control**
To adjust the viewfinder to your eyesight for better focus.

⑬ **MANUAL FOCUS control**
To adjust the focus manually in the manual focus mode.

⑭ **FADER button**
To activate fade-in or fade-out of the picture and audio.

⑮ **RETAKE buttons**
When the Camcorder is in the recording pause mode:

FWD button	: To playback a scene at normal speed in forward direction.
REV button	: To playback a scene at normal speed in reverse direction.
REC REVIEW button	: The last 2 to 3 seconds of the recorded scenes are played back and the Camcorder will again stop in the recording pause mode.

⑯ **REC TIME button**
To select animation recording while in the recording pause mode.

⑰ **SELF TIMER button**
To select self timer recording while in the recording pause mode.

⑱ **FULL AUTO button**
Set the Camcorder to automatically adjust the white balance, shutter speed, focus and iris control.

⑲ **IRIS +/– button**
To control the iris open/close in manual positions.

⑳ **DATE/TIME button**
To select whether or not to record the date/time on the video tape.

㉑ **SHUTTER button**
To select the electronic high shutter speed manually.

㉒ **W. (White) BALANCE button**
To select the manual white balance preset position.

㉓ **FOCUS ZONE SELECT/PUSH AUTO button**

ZONE SELECT	: To select the wide or narrow of focus frame in auto focus mode.
PUSH AUTO	: Momentary automatic focus when this button is pushed in manual focus mode.

㉔ **FOCUS AUTO/MANUAL button**
Press once for automatic focus, and press again for manual focus mode.

㉕ **BLC (Back Light Compensator) button**
To engage the back light compensation mode.

㉖ **Tripod mount**
To attach the Camcorder to the tripod.

㉗ **DATE/TIME SELECT button**
To select the time and date function when setting the built-in clock.

㉘ **DATE/TIME SET button**
To set the time and date functions of the built-in clock.

㉙ **Lithium battery compartment**
To install the lithium battery for auto date/time back up.

㉚ **Lithium battery compartment cover**

㉛ **PSU (Personal Set Up) button**
To preset the operation of the camera section according to your personal choice.

㉜ **Cassette compartment**
Insert the video cassette for recording and playback.

㉝ **MIC. SENS (MICrophone SENSitivity) select switch**
To select the built-in microphone's sensitivity.

㉞ **EXT. MIC (EXTernal MICrophone) jack**
For connecting the external microphone.

㉟ **EVF (Electronic ViewFinder) jack**
For connecting the electronic viewfinder.

㊱ **Hand grip strap**

㊲ **Recording start/stop button**
To start recording from record pause mode or record pause from recording mode.

㊳ **VIDEO IN terminal (/00 model only)**
Video input terminal to record from a TV tuner or another Camcorder.

㊴ **AUDIO IN terminal**
Audio input terminal to record from a TV tuner or another Camcorder.

㊵ **DC IN jack**
To connect the Camcorder to the AC adaptor.

㊶ **FULL REMOTE terminal**
To connect the VIDEO EDITOR control unit (optional).

㊷ **PHONE jack**
To connect the earphone for audio monitoring.

㊸ **Battery compartment**
To mount the rechargeable battery pack.

㊹ **VIDEO OUT terminal**
Video output terminal connects to a TV monitor or another VCR (Video Cassette Recorder).

㊺ **DC OUT terminal**
DC power supply for RF (Radio Frequency) convertor.

㊻ **AUDIO OUT terminal**
Audio output terminal connects to a TV monitor, another VCR (Video Cassette Recorder) or audio set.

㊼ **Battery release button**
To release the battery from the battery compartment.

㊽ **EJECT button**
To eject the video cassette.

㊾ **REW (REWind) button**
Rewinds the video tape.
Fast playback in reverse (REVIEW) in the play mode.
Normal speed playback in reverse (RETAKE) in the recording pause mode.

㊿ **PLAY button**
To start playback.

(51) **WIND button**
Fast forwards the video tape.
Fast playback (CUE) in the play mode.
Normal speed playback (RETAKE) in the recording pause mode.

(52) **PAUSE/STILL button**
Still picture during playback or to stop playback temporarily.

(53) **STOP button**
To engage the stop mode.

(54) **AUDIO DUB (DUBbing) button**
Press this button together with the PLAY button for audio dubbing.

(55) **INSERT button**
To perform insert editing.

(56) **REC button and indicator**
To engage the recording pause mode.

(57) **EDIT ON/OFF switch**
For best picture quality when dubbing to a another VCR (Video Cassette Recorder).

(58) **TRACKING +/– button**
To obtain optimum pictures during playback.

(59) **On track indicator**
To indicate that auto tracking mode is being used.

(60) **COUNTER RESET button**
To reset the counter to "0000".

(61) **COUNTER MEMORY button**
The tape will stop automatically at about the point on the tape you want to locate later.

(62) **COUNTER MODE select button**
To select the tape counter, lap time counter or to delete the counter, battery status and function mode indications in the electronic viewfinder.

Viewfinder display

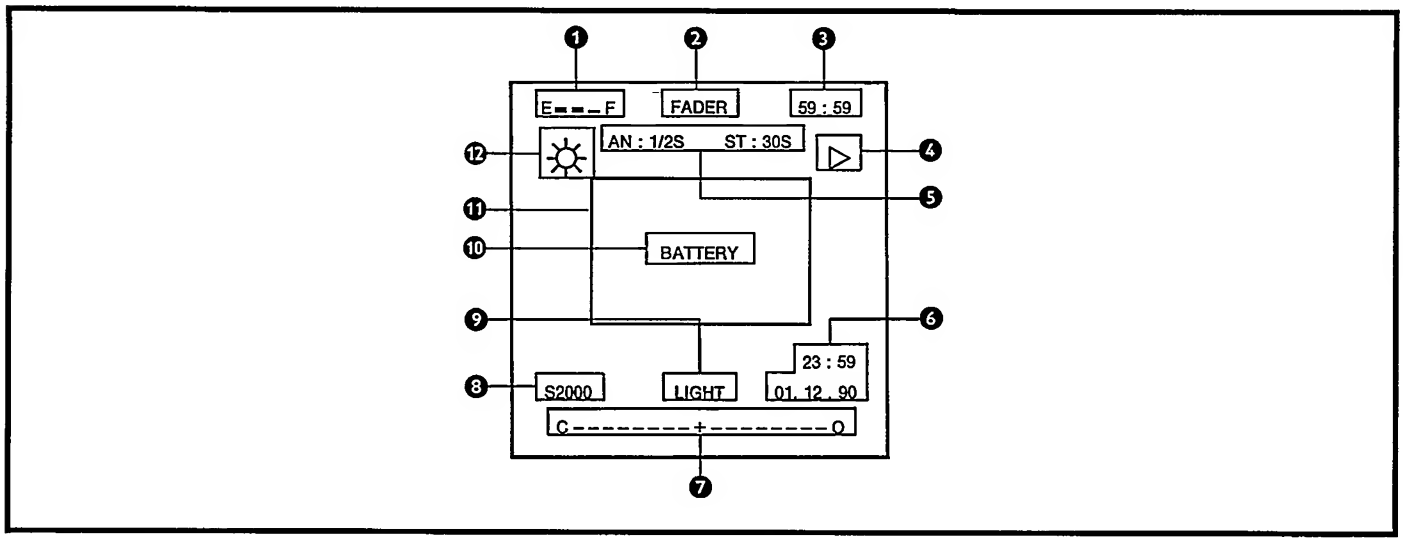

❶ **Battery status display**
Indicates the approximate charge of the battery.

❷ **Fader display**
Indicates the fader is reserved. Blinking "FADER" indicates that the fader mode is in operation.

❸ **Time lapse/Tape counter/Memory stop/Cassette display**
Indicates tape position, tape stop at "M0000" or indicates recording time in hours, minutes and seconds.

❹ **Function modes/Dew warning display**
Indicates the function modes as follows. Also indicates a "DEW" warning, if there is dew in the Camcorder.

STOP:	□	FAST FORWARD:	▷▷	FRAME REVERSE:	◁▯▯
PLAY:	▷	REVIEW:	◁◁	EJECT:	⏏
PAUSE (STILL):	▯▯	CUE:	▷▷	DEW:	
RECORD:	○	AUDIO DUBBING:	⊖	INSERT PAUSE:	⊳ ▯▯
RECORD PAUSE:	○ ▯▯	INSERT:	⊳	REVERSE:	◁
REWIND:	◁◁	FRAME ADVANCE:	▯▯▷	AUDIO DUBBI-NG PAUSE:	⊖ ▯▯

❺ **Timer function display**
Indicates the duration of self-timer recording, animation recording or the interval for time lapse recording.

❻ **Date/time and clock warning (→ E) display**
Indicates date and time, which can be superimposed onto the recording.

❼ **Iris status display**
Indicates the status of the iris in manual mode.

❽ **Shutter speed display**
Indicates the selected shutter speed.

❾ **Low light warning display**
If the blinking "LIGHT" indication appears in the viewfinder, the amount of light is insufficient.
In this case, confirm that the iris and shutter speed are set in the auto mode. If the setting is correct, increase the lighting.

❿ **Battery warning display**
Indicates blinking "BATTERY", if the rechargeable battery is becoming exhausted.

⓫ **Focus zone display**
To indicate the auto focus detecting area.

⓬ **White balance display**
Indicates the mode selected for manual (or auto) white balance.

Mounting the viewfinder

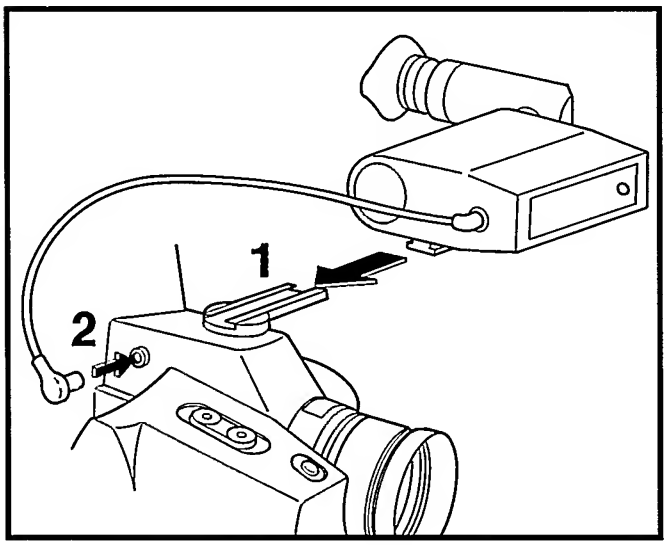

1 Slide the viewfinder holder completely into the mounting shoe.

2 Connect the viewfinder cable connector to the EVF socket.

Positioning the viewfinder

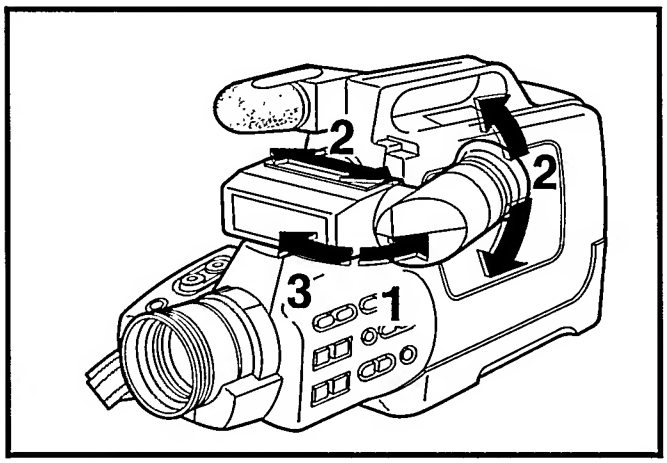

1 Turn the viewfinder outward until it locks with a click to set the viewfinder in the viewing position.

2 The viewfinder can be positioned for the best viewing by sliding it to the left and right and rotating the eye cap part.

3 Turn the viewfinder toward the lens until it locks with a click to restore the viewfinder to its original position.

Dioptric adjustment

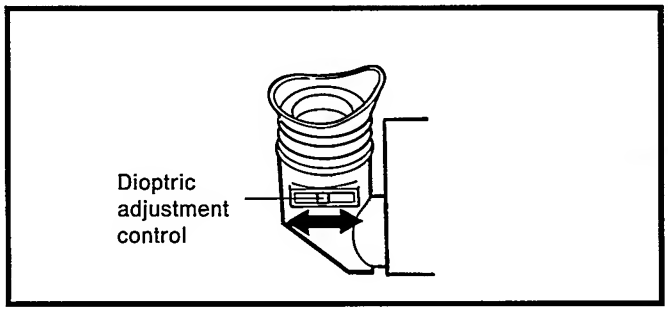

The viewfinder lens can be adjusted to suit the operator's eyesight by moving the dioptric adjustment control lever located underneath the eye cup.

Using the viewfinder in other position

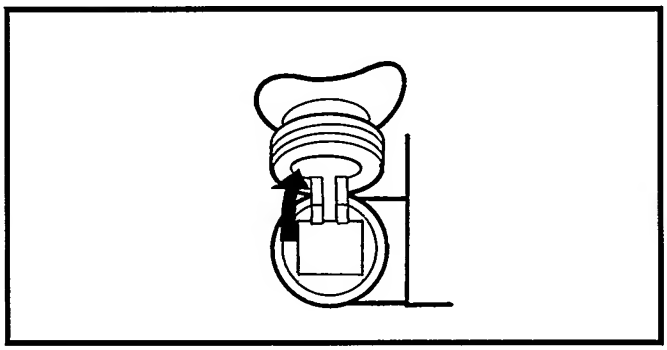

Open the eyecup to look at the picture in the viewfinder from a short distance, such as when shooting from low-angle, etc.

Removing the viewfinder

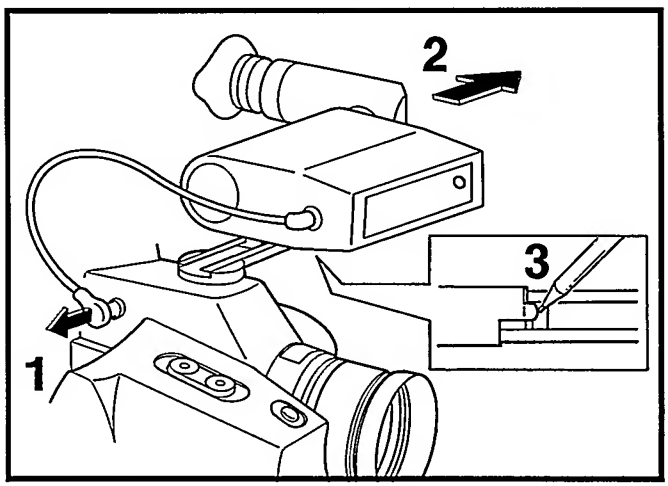

1 Disconnect the viewfinder cable connector from the EVF socket.

2 Slide the viewfinder unit away until the latch engages the stopper.

3 Push the latch with a small pointed object and pull out the viewfinder unit.

Hand-grip strap adjustment

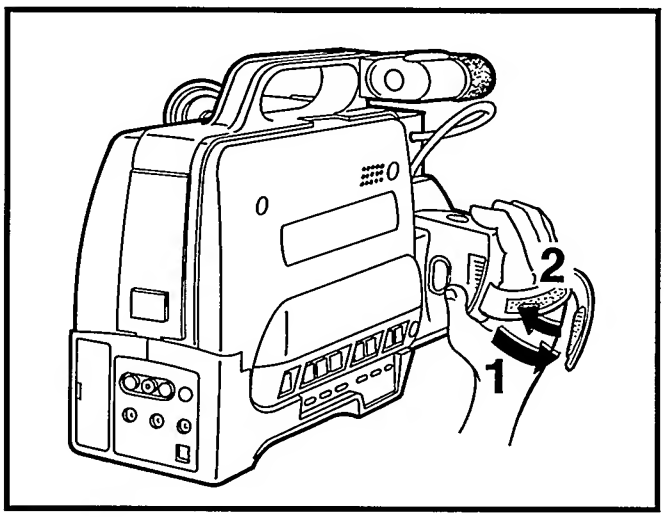

1 Separate the velcro strips to expand the loop.

2 Pass your right hand through the loop and grasp the hand grip. Adjust the length of the strap to suit your hand size and refasten the velcro strip.

Attaching the carrying strap

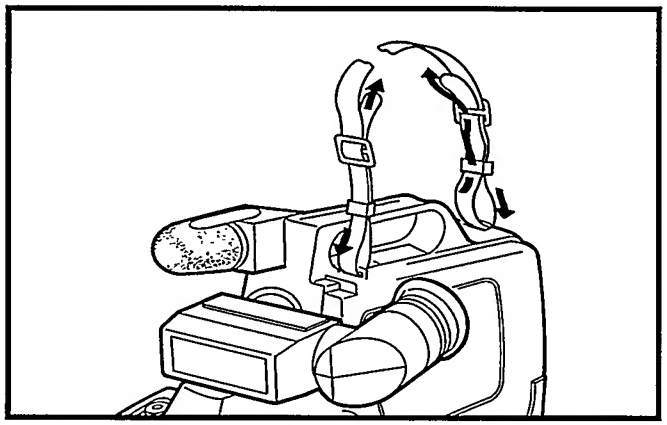

1 Insert the carrying strap through the eyelets on the Camcorder.

2 Insert the end of the strap through the keepers and adjustable buckles and adjust the carrying strap to the desired length, then slide the keepers as close as possible to the mounting eyelets to prevent slippage.

Power supply system

The convenient 2-way power supply system let you choose the most appropriate power supply unit, depending on the application.

Battery pack (SBC5215)

Charging the battery pack

Use the battery pack charging adaptor (22AV5192) provided with the AC adaptor (SBC5440).

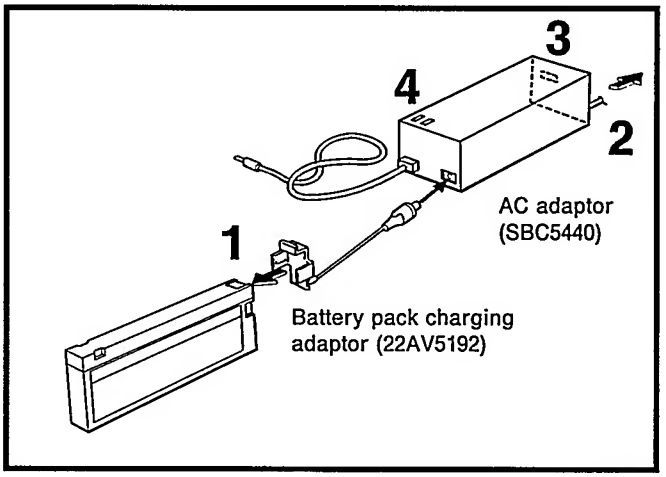

1 Attach the battery pack charging adaptor to the battery pack and the AC adaptor as shown in the illustration.

2 Connect the AC plug of the AC adaptor to the mains.

3 Set the POWER switch to turn the power on. The POWER and CHARGE indicators will light.

4 The charging indicator will go off about 2 hours after charging starts. However, the battery pack should be charged continuously for approx. another 3 hours to be completely charged.

Notes:

- *The charging time differs depending on the ambient temperature and the condition of the battery pack.*
- *A battery pack which is inserted into the Camcorder can not be charged.*

To extend the battery life

1. Be sure to recharge the battery pack soon after use. If the battery pack is left in discharged condition for a long period of time, it may not be possible to recharge it.
2. Be sure to recharge the battery pack before use. If the battery pack was stored for a long time after recharging it, the battery level may be reduced and the operation time could be shortened.
3. Be sure to recharge the battery pack once every six months even if it is not used.
4. If the Camcorder is not used for a long period of time, remove the battery pack from the Camcorder and store it in a dry and cool place.

Inserting/removing the battery pack

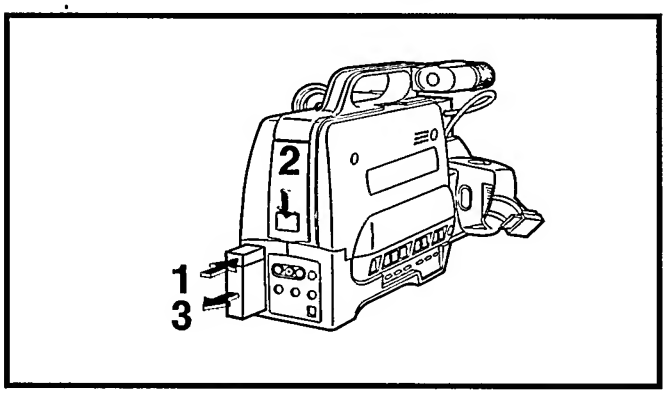

1 Insert the battery pack into the battery compartment of the Camcorder, push the battery in until it clicks into place.

2 To remove the battery pack, release it by pressing the battery release button.

3 Slide the battery out.

Battery warning

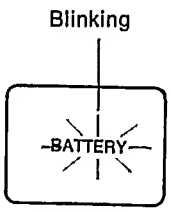

- When the rechargeable battery's power is getting low, the latest battery status indication disappears, also, a battery warning indication appears in the center of the viewfinder.
  In this case replace the battery pack with a fully charged one.

Operating time with the battery pack

This Camcorder can record continuously for approx. 110 minutes at normal temperature (25 °C) with a fully charged battery pack

AC adaptor (SBC5440)

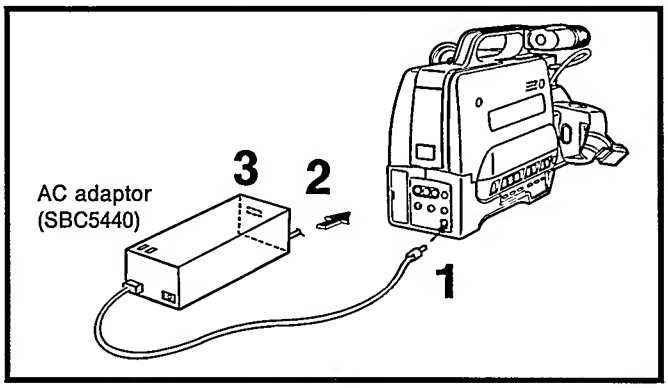

1 Connect the DC output cable from the AC adaptor to the DC input socket on the Camcorder.

2 Connect the AC plug of the AC adaptor to the mains.

3 Set the POWER switch to turn the power on.

Note:
When a battery pack charging adaptor is attached to the AC adaptor, the Camcorder can not be supplied with DC power.

Power saving system

To save power consumption and prevent tape damages, the Camcorder will automatically turn itself off in the following situations:

- When left for longer than 5 minutes in the recording pause mode.
  The tape remains wound around the head cylinder. When switching on again in this condition, the previous settings will remain.
- When left for longer than 5 minutes in the still playback mode.
  When switching on again in this condition, PSU (Personal Set Up) will be set.
- When left for longer than 5 minutes in the stop mode.
  When switching on again in this condition, PSU (Personal Set Up) will be set.

English

Setting the date and time

How to insert the battery for clock operation

1 Be sure that the Camcorder's power is switched off.

2

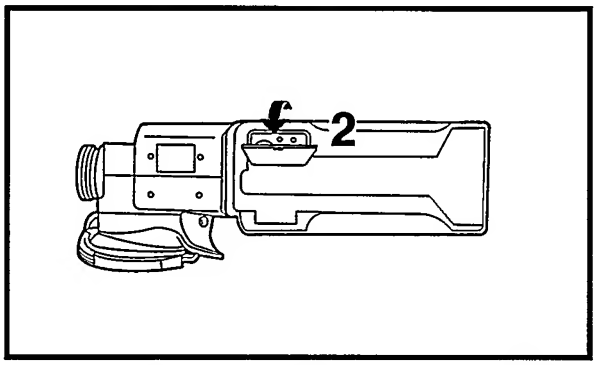

Open the cover of the battery compartment which is located on the bottom side of the Camcorder.

3

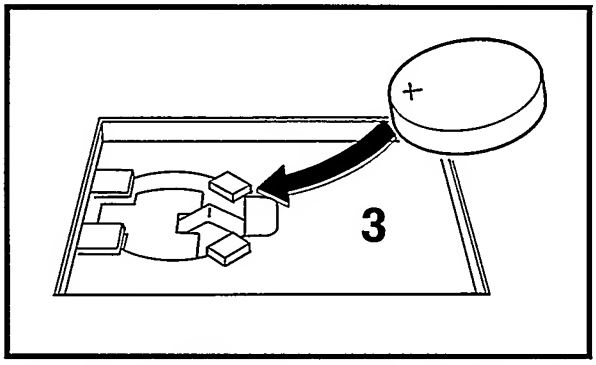

Insert the back-up battery (CR2032), provided with the plus (+) side facing outward until it locks in place.

4 Turn the power on after replacing with a new back-up battery, the blinking date/time function indicates that the date and time have to be set to correct the date and time.
Refer to the next section "Date/time setting".

Note:
If you find a clock warning (→ E) in the viewfinder, then the back-up battery is not correctly installed, is getting exhausted, or is not inserted.

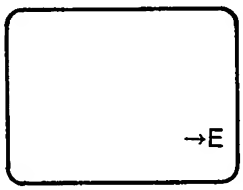

Viewfinder

Date/time setting

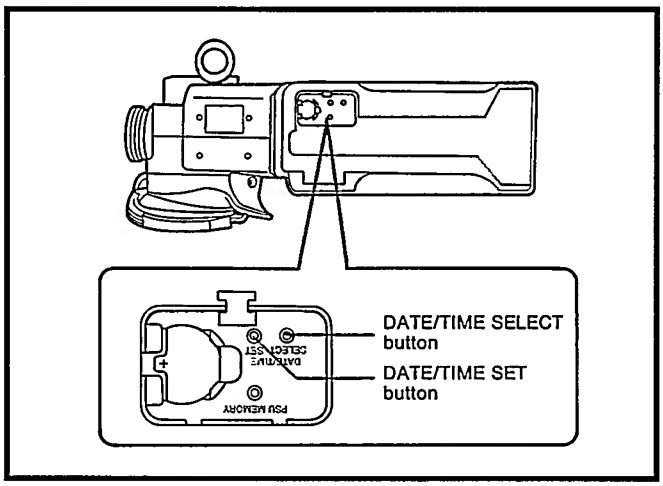

1 Slide the POWER switch to turn the Camcorder on, and set the Camcorder into the monitoring mode (see page 18).

2 Press the DATE/TIME SELECT button — The hour starts blinking in the viewfinder.

3 Press the DATE/TIME SET button to choose the correct setting.

4 Press the DATE/TIME SELECT button to select the next item to change, with the item selected changing in the following sequence:

Hour → Minute → Year → Month → Day

5 Repeat step 2 and 3 to set all items. After the day setting has been performed, press the DATE/TIME SELECT button and then the date and time will stop blinking in the viewfinder.

6 Close the cover.

CAUTIONS FOR BATTERY REPLACEMENT

- The life of the battery is about one year. Inspect if necessary. Replace the battery once a year.
- Load the new battery with its polarities (+ and –) aligned correctly.
- Remove the spent battery immediately and dispose of it.
- When a battery is spent, do not try to recharge it, short circuit or heat the battery and do not throw it into a fire.

Video cassette

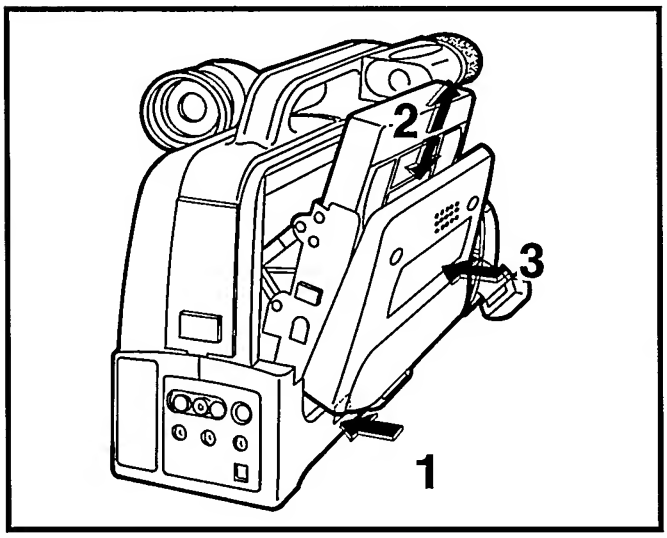

Inserting the video cassette

1 Press the EJECT button to open the cassette compartment.

2 Insert the video cassette into the cassette compartment with its window facing outward.

3 Push the cassette compartment cover inward, until it locks with a click.

Removing the video cassette

1 Press the EJECT button to open the cassette compartment.

2 Take out the video cassette from the cassette compartment.

3 Push the cassette compartment cover inward to close the cassette compartment, until it locks with a click.

Note:
Eject is possible in power off mode.

Notes:
- *This Camcorder employs VHS cassettes only. E-240 for 4 hours, E-180 for 3 hours, E-120 for 2 hours, E-90 for 1 hour and 30 minutes, E-60 for 1 hour and E-30 for 30 minutes of recording.*
- *Recording on to prerecorded tapes automatically erases the previously recorded video and audio signals.*
- *An inverted cassette can not be inserted.*
- *Do not load and unload the cassette repeatedly without allowing the tape to run at all. This will slacken the tape and thereby damage it.*
- *The cassette is equipped with a safety tab to prevent accidental erasure. When the tab is removed, recording is impossible. If you wish to record on a cassette whose tab has been removed, use adhesive tape to reseal the slot.*

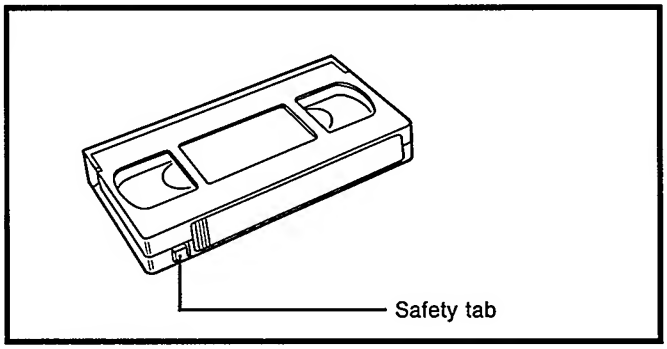

Storage of cassettes
- Avoid exposing the cassettes to direct sunlight. Keep them away from the heaters.
- Avoid storing the cassettes in humid or dusty places.
- Do not drop cassettes. Do not expose them to violent vibrations or shocks.
- Do not expose the cassettes to strong magnetic fields (near motors, transformers or magnets).
- Place the cassettes in cassette cases and store them vertically.

English

Recording

Full auto recording

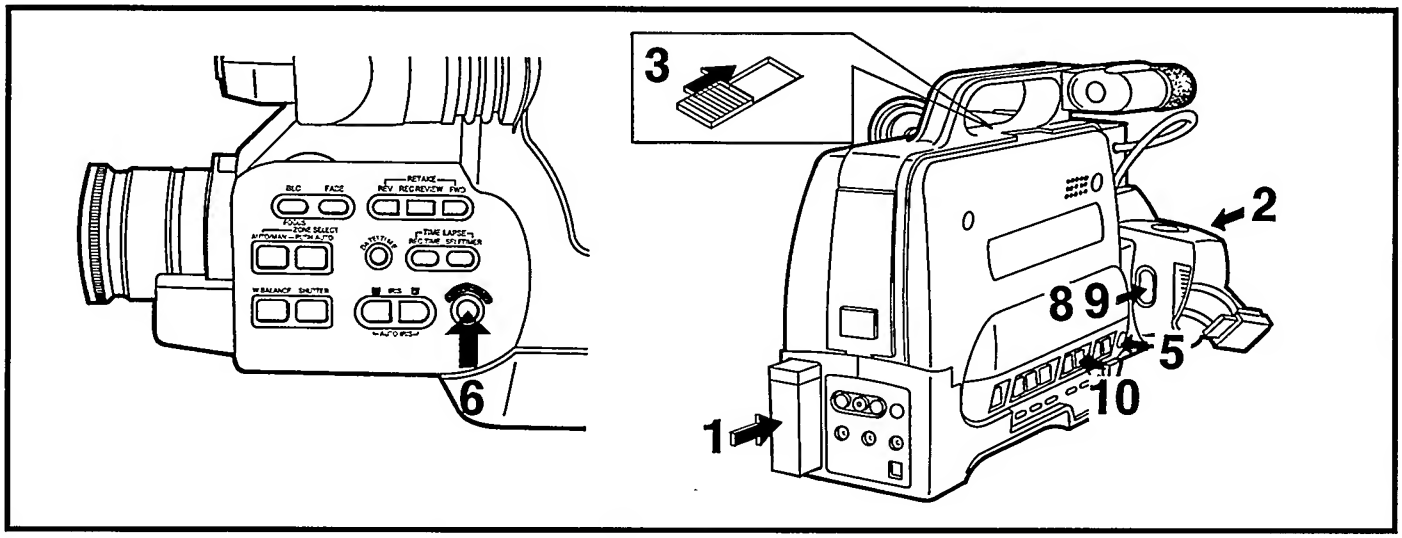

1 Connect a power supply.
(Battery pack or AC adaptor)

2 Remove the lens cap, otherwise "LIGHT" will appear to indicate a lack of light for recording in the viewfinder.

3 Slide the POWER switch to turn the Camcorder on.

4 Insert the video cassette with the erasure prevent tab intact.

5 Press the REC (RECord) button to enter the recording pause mode.

6 Press the FULL AUTO button. The settings made in this way are indicated in the viewfinder as follows:

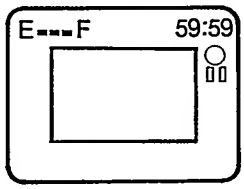

Viewfinder

7 Place the Camcorder in the shooting position.

8 Press the recording start/stop button. The Camcorder will start recording.

9 Press the recording start/stop button again to stop the recording temporarily (recording pause mode).

10 To end recording, press the STOP button or turn the power switch off.

Notes:

- *If the recording pause mode continues for about 5 minutes, the Camcorder will automatically shut off the power to protect the tape from being damaged and to save battery power.*
- *If the power is turned on again in this condition, recording pause mode and the previous settings are reinstalled.*
- *In case you wish to make clean assembled recordings, it is advisable to stop recording by turning the power switch of the Camcorder off.*

Animation recording

By using this function you can create the illusion of movement in otherwise stationary scenes or objects which is called animation.
This technique is accomplished by shooting a series of slightly different pictures of the same scene or slightly different poses of the same object for a brief period of time.

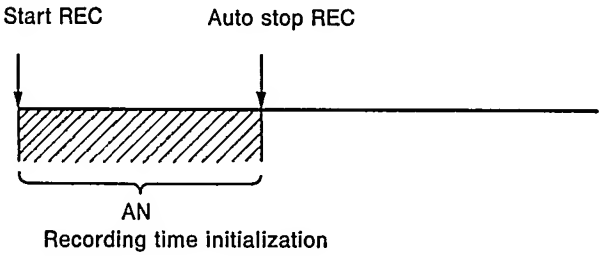

1 Set the Camcorder to the recording pause mode.

2 Press the REC TIME button.
The following information appears in the viewfinder with an initial setting for "AN : 1/2s" to show the Camcorder is set to record for 1/2 seconds.

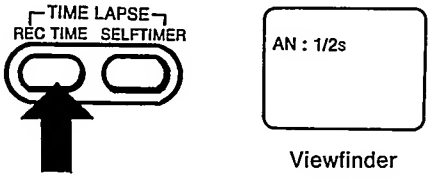

3 Press the REC TIME button again to select the desired recording time. The following sequence of time settings is displayed with each press of the button: 1/2s, 1s, 2s and continuous mode.

No Indication → AN: 1/2s → AN: 1s → AN: 2s

4 Press the recording start/stop button after focusing the Camcorder on the subject, the tally lamp will be lit during recording.
Recording stops automatically in the recording pause mode after the selected period of time.

5 Repeat step 4 for the required number of pictures.

Notes:

- *Keep the Camcorder steady in one position when recording the series of shots for best results. Mounting the Camcorder on a tripod is recommended.*
- *Release the animation mode by pressing the REC TIME button till the AN indicator in the viewfinder disappears, or press the FULL AUTO button.*
- *Add sound later by using the audio dubbing function.*
- *The animation mode can only be engaged from the recording pause mode.*
- *During the animation mode (AN: 1/2s, 1s, 2s), the fader function cannot be engaged.*
- *If the fader function has been selected, the animation mode cannot engaged.*
- *Before recording in the animation mode at the very beginning of a tape, set the Camcorder to record mode for about 5 seconds, so that the tape runs smoothly. Using the fade-in function at this point is a good way to begin an animated program.*
- *The recorded time can differ slightly depending on the length of the cassette (E60 to E240) and the tape position. (Beginning or end of the tape.)*

Self-timer recording

The self-timer function allows you to set the amount of time delay before recording starts after the recording start/stop button has been pressed. If the Camcorder has been secured, the operator can enter the picture before actual recording begins.

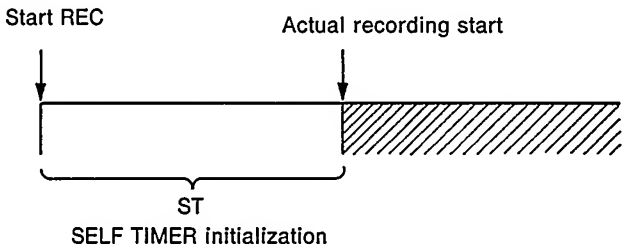

1 Set the Camcorder to the recording pause mode.

2 Press the SELF TIMER button.
The following information will appear in the viewfinder with an initial setting for "ST : 15s" to show that the Camcorder is set for 15 seconds delay before recording begins.

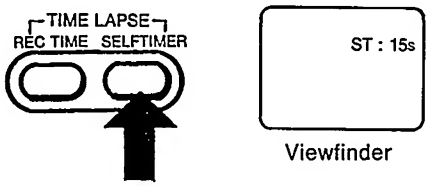

3 Select the desired interval time by pressing the SELF TIMER button repeatedly. The following sequence of time settings are displayed with each press of the button: 15s, 30s, 1M, 3M and normal mode (no delay).

No indication → ST: 15s → ST: 30s → ST: 1M → ST: 3M

4 Press the recording start/stop button. When the selected time has elapsed, recording begins automatically.
When the self timer function is activated, the selected self time (ST) indication starts blinking in the viewfinder and disappears when the function is completed.

Note:
Release the self timer mode by pressing the SELF TIMER button until the ST indication in the viewfinder disappears or press the FULL AUTO button.
When performing self-timer recording, the tally lamp will start blinking approximately 10 seconds before the actual recording begins.
Then, when recording starts, the lamp lights normally to indicate that recording is in progress.

Time-lapse recording

The time-lapse function allows automatic sequential on/off recording at reset time spans. With the Camcorder continuously focused on a specific scene or object, the resulting recording will shows subtle changes (such as shifts in cloud formations, plant growth etc.) over an extended period of time.

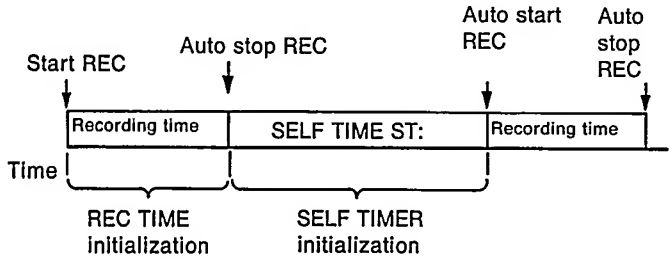

1 Set the Camcorder to recording pause mode.

2 Press the REC TIME button.
The following information will appear in the viewfinder with an initial setting for "AN:1/2s" to show the Camcorder is set to record for 1/2 seconds.

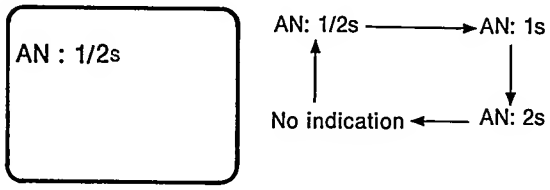

Select the desired recording time by pressing the REC TIME button repeatedly. The following sequence of time settings is displayed with each press of the button: 1/2s, 1s, 2s and no indication

3 Press the SELF TIMER button.
The following information will appear in the viewfinder with an initial setting for 15 seconds.

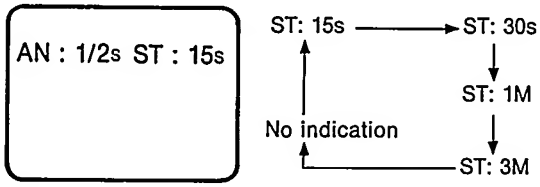

4 Select the desired interval of time by pressing the SELF TIMER button repeatedly. The following sequence of time settings are displayed with each press of the button: 15s, 30s, 1M, 3M and no indication

5 Press the recording start/stop button to start the time-lapse recording. The selected recording time and interval time will alternate automatically.
The initialized values of the animation time (AN) and the self time (ST) in the viewfinder start blinking.
When the animation time (AN) is active (recording), the tally lamp will be lit. The tally lamp will start blinking approximately 10 seconds before the actual recording begins of self timer settings to record for the next initiated animation time.
To release the time-lapse mode, press either the STOP button, FULL AUTO button or the REC TIME and SELF TIMER buttons the number of times necessary to release their respective mode.
When the time-lapse function is executed, the recording and pause series is repeated 500 times before entering the recording pause mode.

English

Second recording START/STOP button (For low-angle shots)

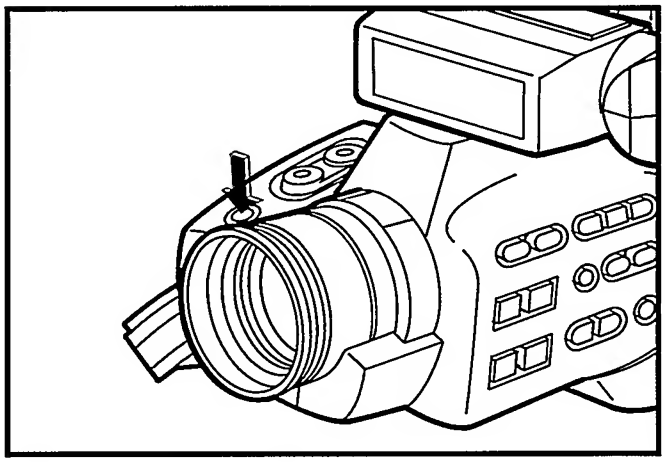

When you shoot scenes at a low angle, use the second recording START/STOP button (sub trigger) for better viewing and securer positioning of the Camcorder.

Fixing the lens cap

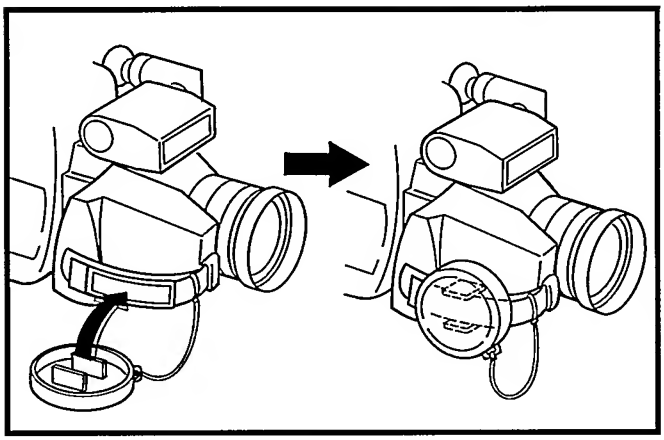

When shooting, attach the lens cap onto the hand grip strap as illustrated.

Monitor mode

If you wish to monitor the scene without recording on the video cassette, the Camcorder can be used as a camera.

When a video cassette is already loaded

1 Press the REC (RECord) button while keeping the STOP button pressed.
The Camcorder will enter into the monitor mode and the following display appears in the viewfinder together with the camera setting indications.

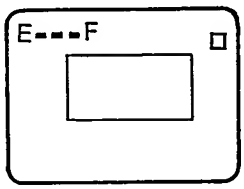

2 Press the REC (RECord) button again the comcorder will enter into the recording pause mode.

When a video cassette is not loaded

1 Press the REC (RECord) button.
The Camcorder will enter into the monitor mode and the following display appears in the viewfinder together with the camera setting indications.

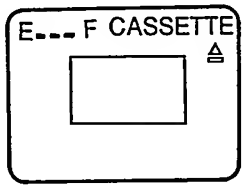

Notes:
- *To disengage the monitor mode, press the STOP button.*
- *The power saving circuit does not function during monitoring mode.*
- *The fader and counter select functions cannot be used.*

Focus

Automatic focus

1

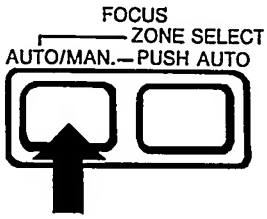

Set the FOCUS AUTO/MAN (MANual) button to automatic focus mode.
The white frame (focus zone) will appear in the viewfinder.

- While watching the picture in the viewfinder, aim the Camcorder at the subject on which you want to focus.

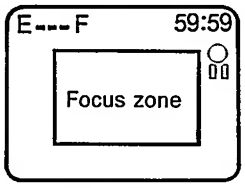

Viewfinder

Note:
This auto focus system does not measure the actual distance but adjusts the lens to the optimum focus based on the video signal.

Selecting the focusing zone with the focus adjusting button
The focus will automatically be adjusted to the object within the focusing zone.

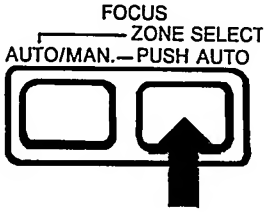

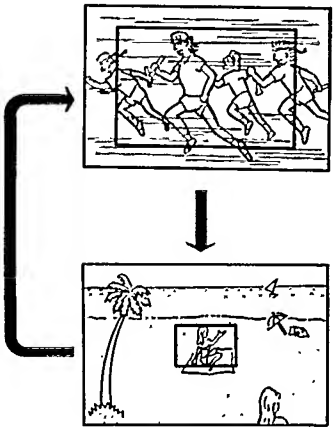

By pressing the ZONE SELECT button, you can select between the large and small focusing zone frame.
Use the small frame focusing zone when shooting at the wide position of the zoom lens or when the subject to be shot is very small.
Use the large frame focusing zone to shoot a moving subject or for panning.

- When the light level is insufficient, the focusing zone frame starts to flash, which means that the auto focus system cannot find the optimum focus position.
- Under the following shooting conditions, the auto focus system will not be able to provide stable and exact focus adjustment. In such cases, manual focusing should be performed to obtain proper focus.
  1. When shooting a subject through dirty glass.
  2. When shooting subjects with shiny surfaces.
  3. When shooting a subject with a part of it near and another part far from the Camcorder.
  4. When shooting an oblique subject.
  5. When shooting a subject with distinct horizontal stripes.
  6. When shooting a flat subject such as a white wall.
  7. When no part of the subject is within the focusing zone frame.
  8. When shooting the macro close-up function or with special lenses or filters.
  9. When shooting a fast moving subject.
  10. When shooting a dark subject.

English

Manual focus

1

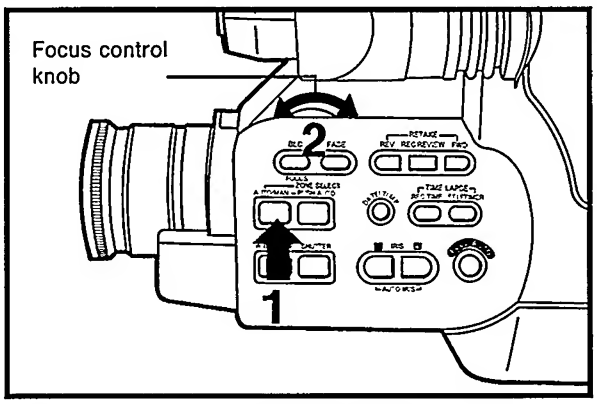

Press the FOCUS AUTO/MAN (MANual) button to select manual focus mode. The white frame (focus zone) will disappear in the viewfinder.

2 Adjust the focus by turning the focus control knob.

Note:
When you use the manual focus mode, be sure to focus the lens to the maximum telephoto position.
If you focus in on a certain subject in the wide-angle position, sharply-focused images cannot be obtained when zoomed up because the depth of field is reduced at longer focal lengths.

One time automatic focus

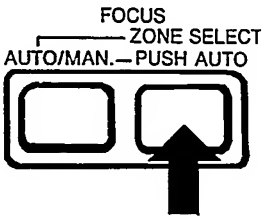

With manual focusing, momentary automatic focus adjustment is possible for as long as the PUSH AUTO button is kept pressed.
While the PUSH AUTO button is pressed, the white frame will be shown in the viewfinder.

Zooming

1

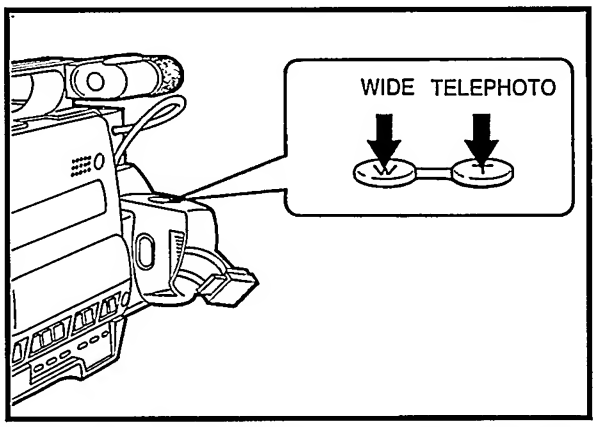

Press the "T" zoom button for zooming in and the "W" zoom button for zooming out.
Slow speed : Press lightly
High speed : Press firmly

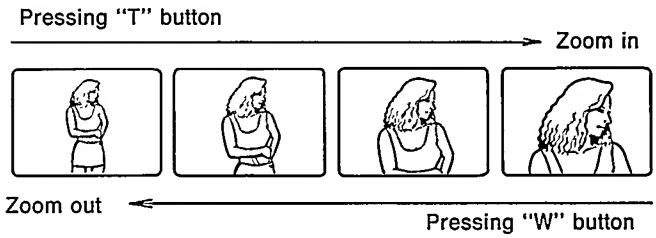

Macro close-up

For shooting small subject.

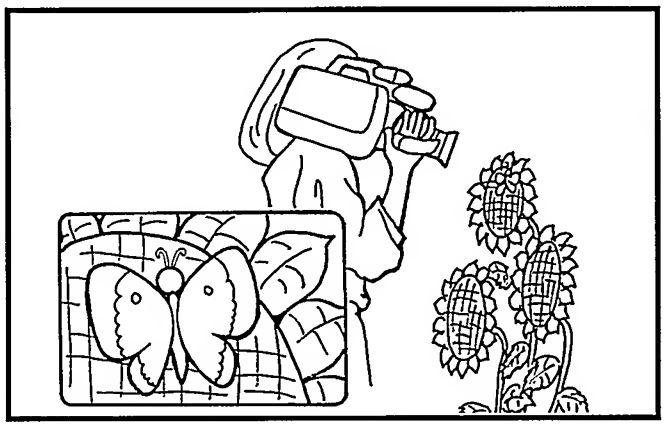

When pressing the "W" zoom button to zoom to wide-angle, it is possible to focus on objects that are more than 10 mm away from the front lens surface. (Full range auto focus > 30 mm)
When zooming to wide-angle, you have only to approach the objects and shoot them.

- The focus can be adjusted in the "AUTO", "ONE TIME AUTO" or "MANUAL" focusing mode.
- When zooming in on an object by pressing the "T" side of the zoom button, the focus can be adjusted to a distance of 1.5 m or more.

White balance

Auto white balance

The Camcorder's fully automatic white balance system senses the colour temperature of the ambient lighting for automatic white balance adjustment.

1 Press the W. BALANCE select button until the white balance indication in the viewfinder disappears. The auto white balance mode can also be set by pressing the FULL AUTO button.

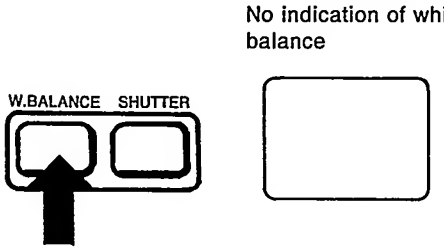

Manual white balance

In certain cases, the use of the manual (preset position) is recommended.

1 Press the W. BALANCE select button until the required symbol appears in the viewfinder.

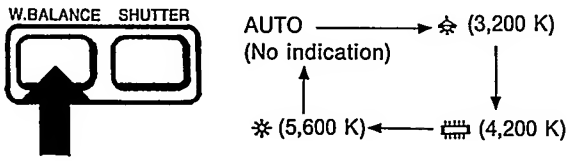

(3,200 K) : Under the light of a halogen or tungsten lamp.
(4,200 K) : Under the light of a fluorescent lamp.
(5,600 K) : Under sunlight (natural light).
No indication : Automatic white balance.

Notes:

The auto white balance adjustment may not be accurate when:

1. *The illumination on the subject is different from the light falling on the Camcorder.*
2. *Either the Camcorder or the subject is in the shade.*
3. *Intense lighting is used, e.g. from a mercury vapour, natrium or fluorescent lamp.*
4. *The illumination is not bright enough (less than approx. 9 lux).*
5. *The illumination of the scene is coloured red, e.g. during sunrise or sunset.*
6. *Intensive light falls only on the red or blue light sensor in the window.*
7. *There are other light sources outside the sensing range of the white balance adjustment sensors, e.g. snowy landscape, cloudy weather, incandescent light or candlelight.*
8. *Some object is placed before the sensor window preventing light from reaching it.*
9. *When shooting in the macro range, the auto mode does not operate. In this case, press the W. BALANCE button.*

High speed shutter

This Camcorder has a high speed shutter that allows the recording of quick movements of the subject with superior sharpness and clarity.
When playing back quick-motion recordings made with a high speed shutter setting, sharp, clear stills and slow-motion playback will be possible.
If the shutter speed is preselected, the iris will be automatically adjusted.

1 By repeatedly pushing the high speed shutter button, the shutter speed can be changed as follows:

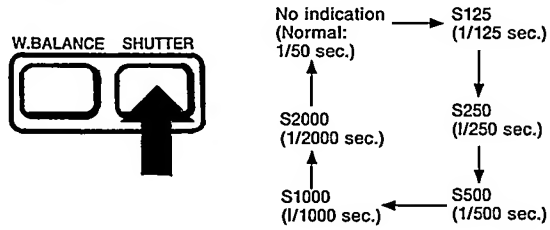

Notes:

- *When the high speed shutter setting is used, the "LIGHT" indication might appear in the viewfinder. This shows that more light is needed for clear pictures.*
- *No indication of shutter speed means the shutter is set to 1/50 second.*

English

Iris

Auto iris

Iris is automatically adjusted in the full auto mode.
The iris indication is not displayed in the viewfinder.

Manual iris

1 Press either IRIS + or – button, the iris indication appears in the bottom of the viewfinder.

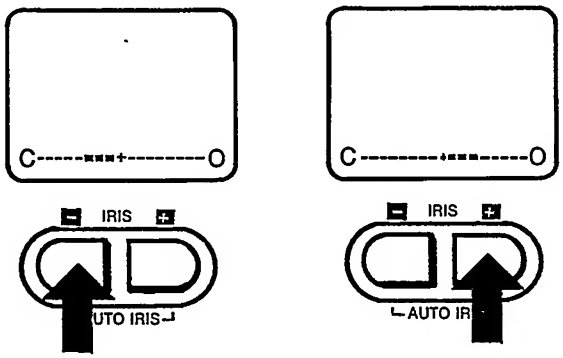

2 Adjust to the required iris level.

IRIS + button : Each time this is pressed, the aperture opens one step, up to 8 steps, and is indicated in the viewfinder. (O : open)

IRIS – button : Each time this is pressed, the aperture closes one step, up to 8 steps, and is indicated in the viewfinder. (C : close)

Notes:

- *When you simply wish to compensate for strong backlighting, see the section "BLC (Back Light Compensation)".*
- *To go back to auto iris mode, press the IRIS + and – buttons simultaneously.*
  Auto iris mode can also be obtained by pressing the FULL AUTO button.

BLC (Back Light Compensation)

When excessive lighting exists behind the subject, the correct exposure of the recorded subject may not be obtainable. To Compensate for this, use back light compensation.

1 Press the BLC button. While it is being pressed, the iris will open more than before.

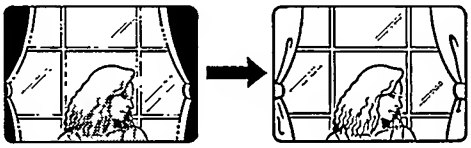

- If you release the BLC button, the iris will return to the same condition as before.
- Under low lighting conditions, BLC is not available.

Date/time recording

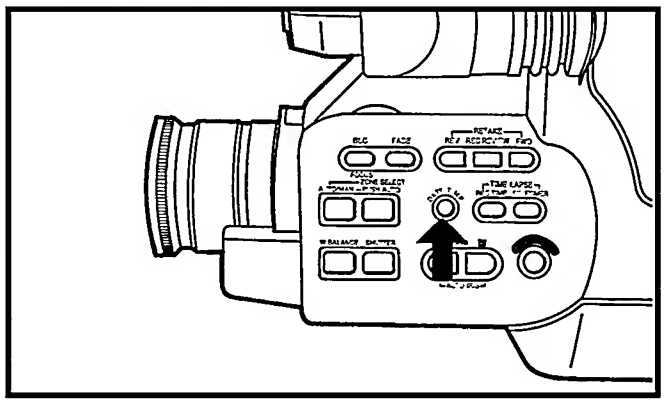

When the DATE/TIME button is pressed repeatedly, the indications will change in the following sequence:

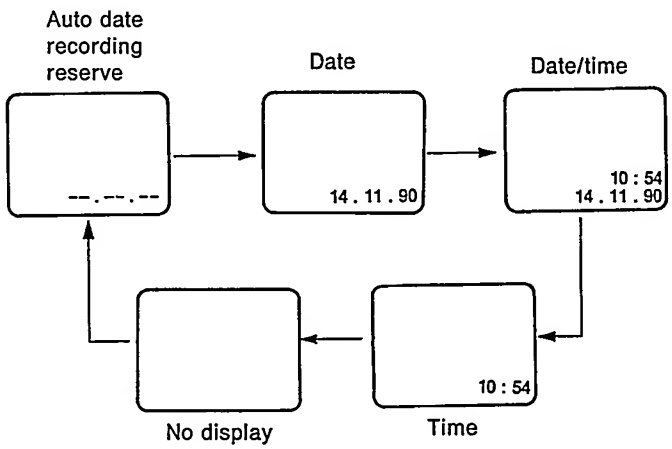

- During recording, the date/time functions cannot be changed.

- When the auto date recording reserve mode is selected, -- . -- . -- appears in the viewfinder until recording begins.
  Press the recording start/stop button to start the first recording and the actual date will be recorded for 5 seconds on your tape.
  After 5 seconds of auto date recording, the display changes again to the bar display "-- . -- . --" indicating that the auto date remains selected.
- The auto date function is activated again if it is selected by the date/time key or if the Camcorder has been switched on from the stop (tape unloaded) mode.

PSU (Personal Set Up) memory

Some operations of the camera part of your Camcorder can be preset according to your personal preference. When switching on the power from stop or eject modes, this personal preference will be activated. Below, you will find a list of presettable modes that can be stored in the PSU (Personal Set Up) memory.

White balance	: Automatic, , ,
Iris	: Automatic, manual
Shutter	: Normal (S50)/manual : S125, S250, S500, S1000, S2000
Focus	: Automatic/manual
Focusing zone	: Large/small

1

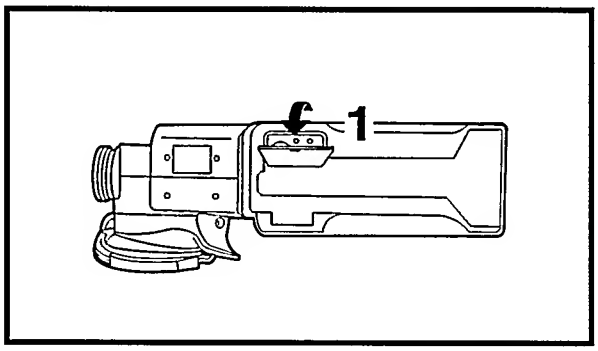

Open the cover of the back up battery compartment on the bottom side of the Camcorder.

2

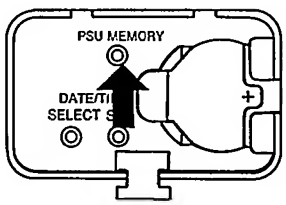

Select any of the parameters listed above and push the PSU memory button to store this setting in the Camcorder's memory.

3 Close the cover.

- If you switch off your Camcorder from stop or eject mode and switch it on again later, your Camcorder will continue to operate with these personal settings. Hence the name "Personal Set Up".
- If you install a new lithium battery, however, you will need to set up the parameters again.

Note:
When PSU data is not memorized, the Camcorder will operate in the fully automatic mode after the power has been switched off and then on again.
If you want to change back to the normal settings of the fully automatic mode after presetting the PSU memory, you must reset the PSU memory with the normal settings for the fully automatic mode.

Microphone sensitivity select switch

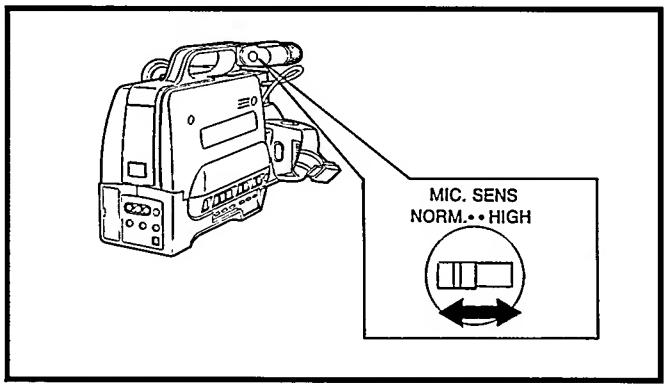

The sensitivity of the built-in microphone can be increased by setting the microphone sensitivity select switch to "HIGH".
Usually, this select switch is left in the "NORM." position.

English

Fader

This Camcorder incorporates a fader function which allows smooth video and audio fade-in and fade-out with a black blank screen. The fader is simultaneously activated with the recording start/stop button operation.

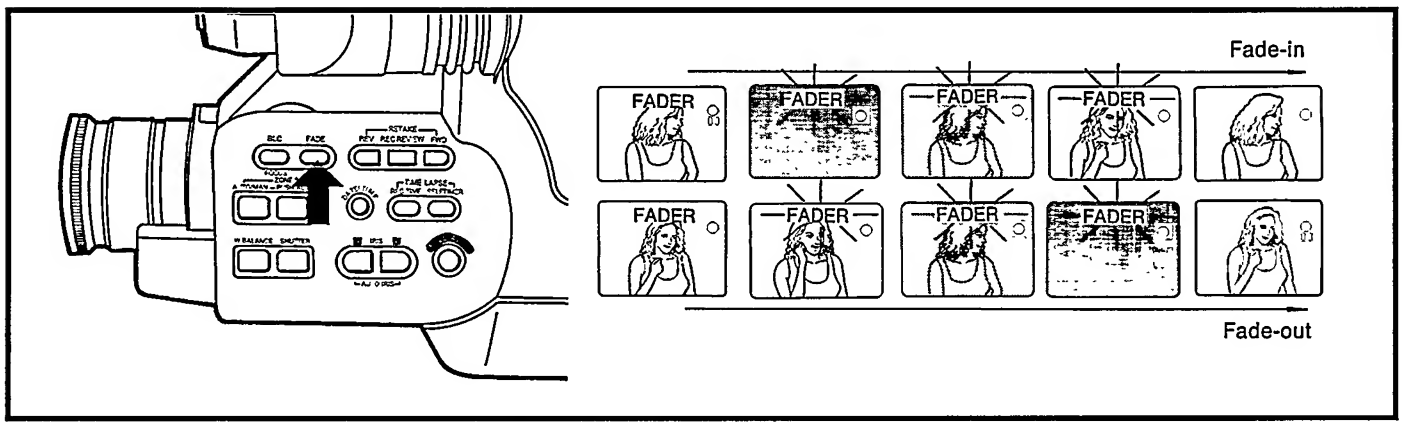

Fade-in

1 Set the Camcorder to recording pause mode and press the FADE button to reserve the fade-in operation.
The "FADER" indication appears in the viewfinder and the fade-in operation is reserved.

2 Press the recording start/stop button. The screen will quickly become black and recording begins. When the recording start/stop button is released, fade-in will start and be completed in about 5 seconds.
When the fade-in process is started, the FADER indication in the viewfinder will start blinking and then disappears when the fade-in process has been completed.
If the recording start/stop button is not released after being pressed, the black picture will remain on the screen and be recorded.

Fade-out

1 Press the FADE button to set the fade-out operation.
The FADER indication appears in the viewfinder and the fade-out operation is reserved.

2 Press the recording start/stop button. Fade-out will start and be completed in about 5 seconds.
When the fade-out process is started, the FADER indication in the viewfinder will start blinking and disappears when the fade-out process has been completed.
If the recording start/stop button is not released after being pressed, the final black picture remains on the screen and continues to be recorded until the button is released.

Note:
During the timer recording mode function (animation, self-timer and time-lapse), fader function is not available.

Assemble recording

To replace the battery pack during recording

1. If the battery warning appears in the viewfinder while recording, stop recording by pressing the recording start/stop button and slide the POWER switch to off.
2. Replace the battery pack with a fully charged one.
3. Slide the POWER switch to on. The unit will be in the recording pause mode.
4. Press the recording start/stop button to start recording.

Note:
After switching the power on again, the Camcorder will continue to operate according to the latest data setting. (Refer to page 12.)

Retake

To search for the assemble point with the "RETAKE" function

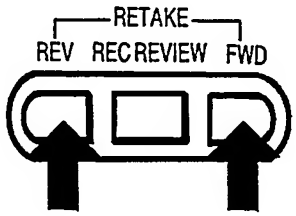

1. Set the Camcorder to the recording pause mode.
2. Press either the REV (REVerse) or FWD (ForWarD) button to reach the point where you wish a new recording to start.
3. Press the recording start/stop button to start recording.

Note:
In case the optional VITC generator is being used, noise may appear on the screen. This is normal.
When using retake techniques while shooting a tape, the user has to be aware that fully automatic editing by means of the optionally available editor IHP6803/6804, for almost professional quality editing is impossible due to the interrupted VITC data.

REC REVIEW function

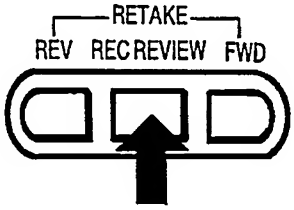

If you want to review the end of last recording for confirmation, press the REC REVIEW button from the recording pause mode; the tape will be rewound for about 3 seconds of programme time and played back automatically for this section, after which it will stop in the recording pause mode for the next shot.

English

Playback

Monitor the playback in the viewfinder or on the TV (for TV monitoring, see section "Connection for playback" on page 28).
To monitor the audio during monitoring with the viewfinder, connect the earphone into the PHONE jack.

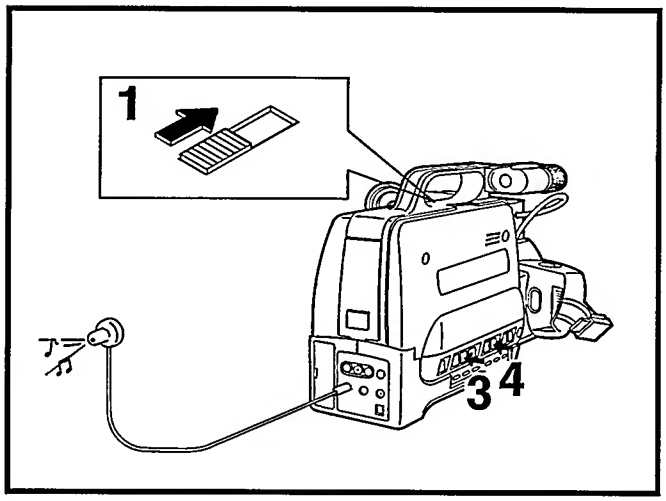

1 Slide the POWER switch to turn the Camcorder on.

2 Insert the prerecorded video cassette tape.

3 Press the PLAY button to start playback.

4 Press the STOP button to stop the playback.

Picture search

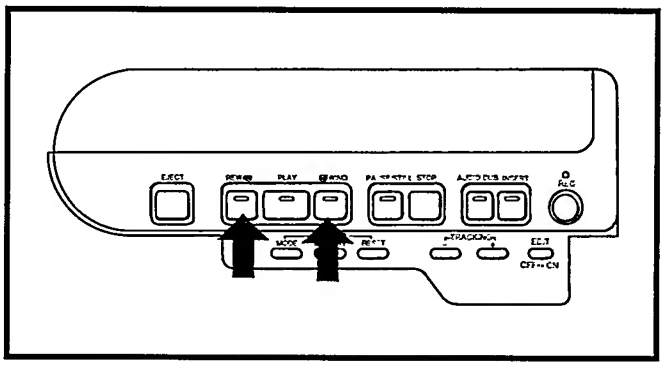

High-speed playback in the forward direction (CUE)

1 Press the WIND button once during playback.

2 To return to normal playback mode, press the PLAY button.

High-speed playback in the reverse direction (REVIEW)

1 Press the REW (REWind) button once during playback.

2 To return to normal playback mode, press the PLAY button.

Still playback

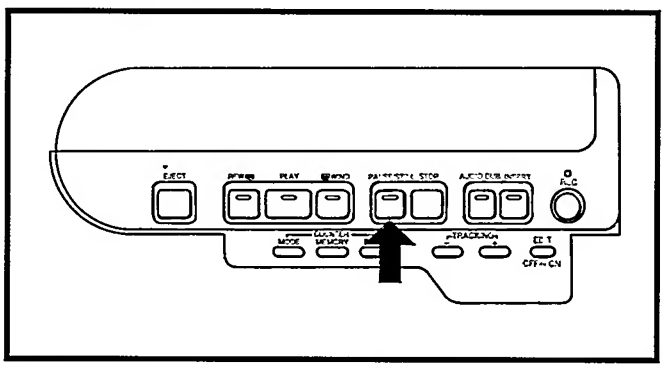

1 Press the PAUSE/STILL button during playback.

2 To return to normal playback, press the PLAY button.

Note:
Noise bars will appear while in picture search and still playback modes.
This is not due to any defect of the Comcorder.

Frame advance

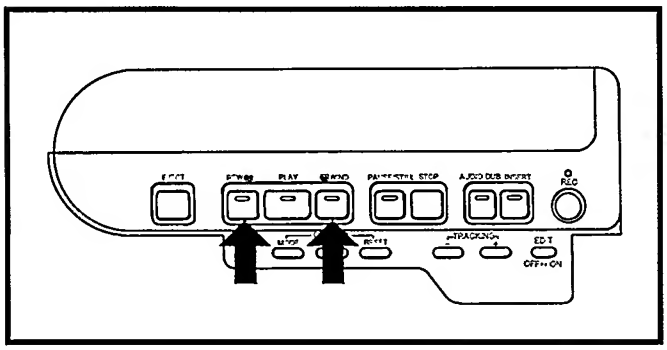

In the pause/still mode, each time the WIND or REW (REWind) button is pressed, the picture will advance (forward or reverse) by one or a few frames.

Tracking

Auto tracking

Auto tracking adjustment is performed automatically to obtain an optimum picture at the first time playback is executed after inserting a cassette.

Tracking indicator blinking : Setting the tracking.
Tracking indicator lit : Setting of tracking has finished.

Manual tracking

Manual tracking might be more effective, depending on the video cassette being used.

1 Press either the + or – tracking button to obtain an optimum picture.
In case of manual tracking, the auto tracking indicator will switch off.

- Press both + and – tracking buttons simultaneously to reset the tracking.

Tracking in still mode

Press either the + or – tracking button to obtain the stable picture in the still mode.

Notes:

- *The sound will be played back only during normal playback mode.*
- *Playback : The tape will rewind automatically when it reaches the tape end.*
  Fast forward : The tape will stop automatically when it reaches the tape end.
  Rewind : The tape will stop automatically when it reaches the tape beginning.
  Still playback : If the still (play pause) mode continues for about 5 minutes, the Camcorder will automatically shut off the power to protect the tape from damage and to save battery power.

English

Connection for playback

Connection to television equipped with an Euroconnector

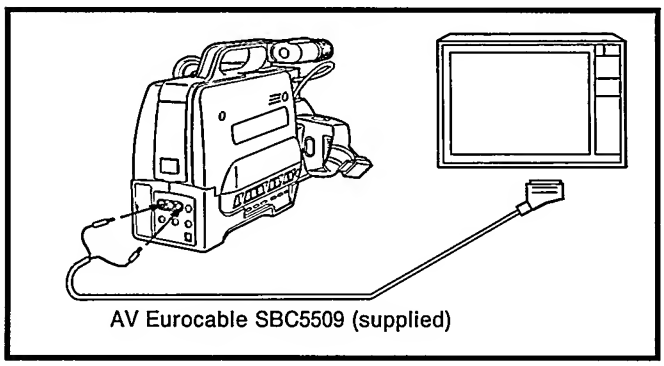

1 Connect the Camcorder's VIDEO OUT and AUDIO OUT terminals to the TV's Euroconnector using the provided AV Eurocable SBC5509.

Connection to a television not equipped with an Euroconnector

Use the RF converter SBC5411 (optional) for this connection.

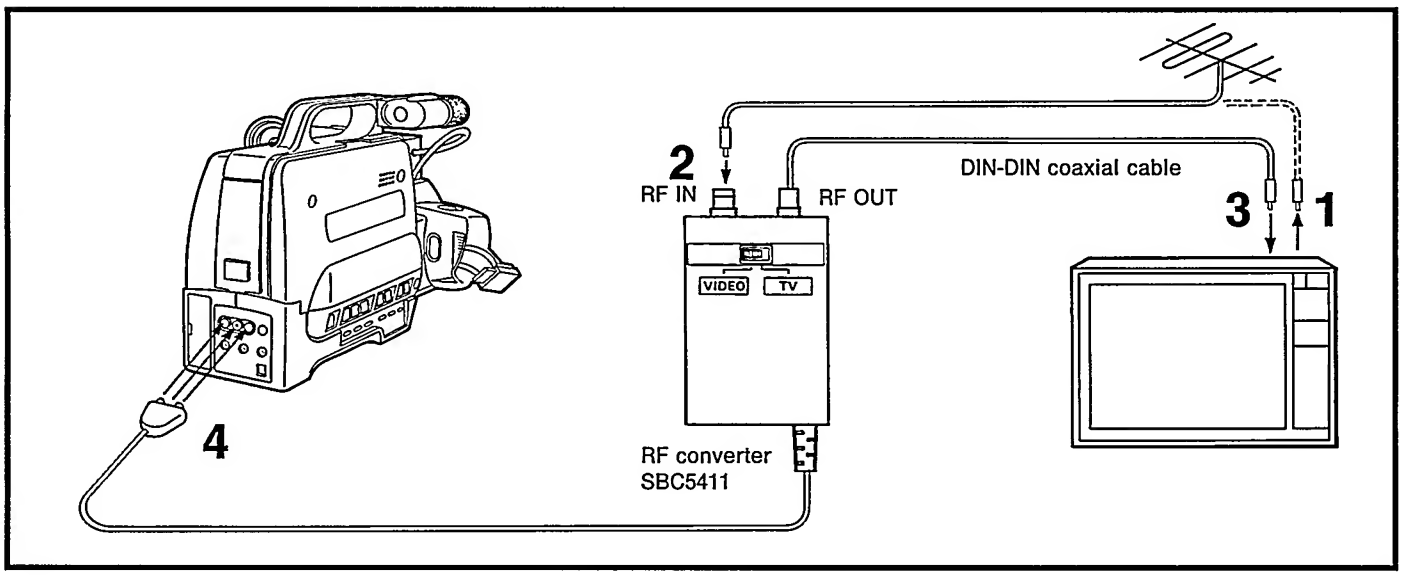

1 Remove the aerial cable from the TV receiver.

2 Connect the aerial cable to the RF IN terminal of the RF converter.

3 Connect the RF OUT terminal of the RF converter to the aerial terminal of the TV receiver using a DIN-DIN coaxial cable supplied with the RF converter.

4 Connect the input cable of the RF converter to the VIDEO/AUDIO/DC OUT terminals of the Camcorder.

5 Set the TV system select switch on the side of the RF converter according to the TV system used in your area.
G : For continental Europe
I : For UK

6 Set the VIDEO/TV select switch to VIDEO.

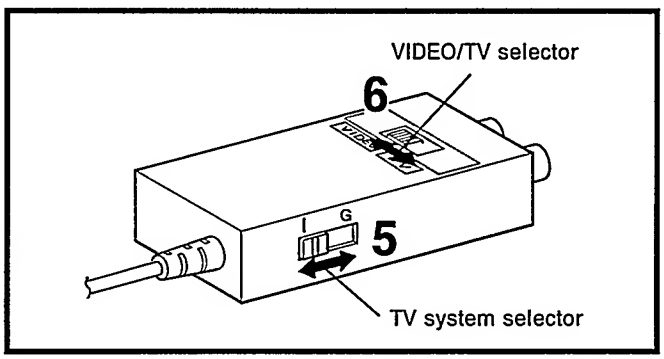

Selection of the VIDEO/TV selector switch

VIDEO : Used for the playing back a video cassette on the Camcorder.
TV : Used for watching TV.

Used time display and counter memory

The Camcorder has useful functions for easy reference of the accumulated recording time and for quick searching for a specific tape position.

Used time display

With the COUNTER MODE button, the tape counter, scene counter (used time) or no counter indication can be selected.

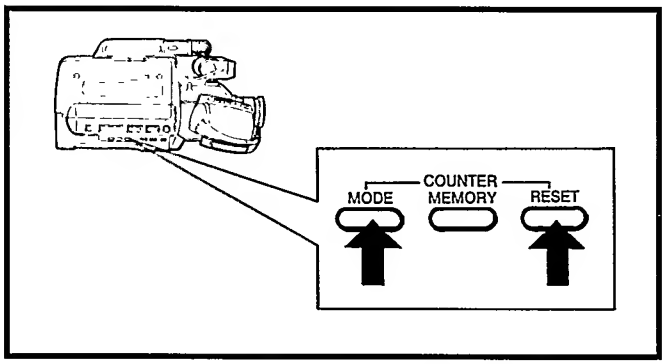

1 Press the COUNTER MODE button to select used time mode.
By repeatedly pressing the COUNTER MODE button, the display in the viewfinder can be changed in the following sequence:

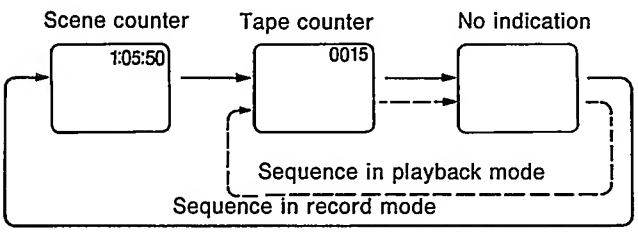

2 If you wish to set the counter indication to zero ("0000" or "00:00"), press the COUNTER RESET button.

Notes:

- *The scene counter (used time) can be displayed up to 9 hours 59 minutes 59 seconds (the hour time is only displayed for an accumulated time greater than 59 minutes 59 seconds).*
- *The used recording time will be automatically accumulated when the record is switched off and on by pressing the recording start/stop button.*
- *In counter off mode, the battery status indication and the counter and clock function mode indications are not displayed.*

Counter memory

This Camcorder incorporates a counter memory mechanism which facilitates locating specific tape segments.

1 Press the COUNTER MODE button to display the tape counter in the viewfinder.

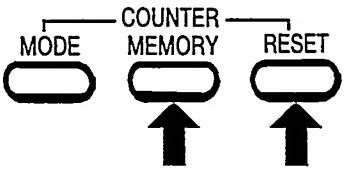

Press the COUNTER RESET button to reset the counter to zero "0000".

2 Press the COUNTER MEMORY button.
The "M" symbol will appear in the viewfinder.

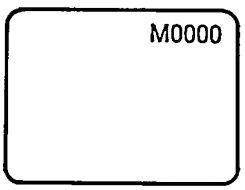

3 After recording or playback, press the STOP button and then the REW button.
The tape will automatically stop at a counter reading of around zero "M0000".

Notes:

- *The counter memory function is effective during wind or rewind as well.*
- *The counter memory function will remain in the memory mode when the Camcorder is switched on and off.*
- *To cancel the memory function, press the COUNTER MEMORY button. The "M" symbol will disappear.*
- *When the power supply unit is disconnected, all indications on the counter display disappear and the counter memory function is cancelled.*
- *When the memory function is active, the counter display mode cannot be changed.*

English

Editing techniques

Insert editing

Replacing pictures and sound on a pre-recorded tape with new scenes and sound.

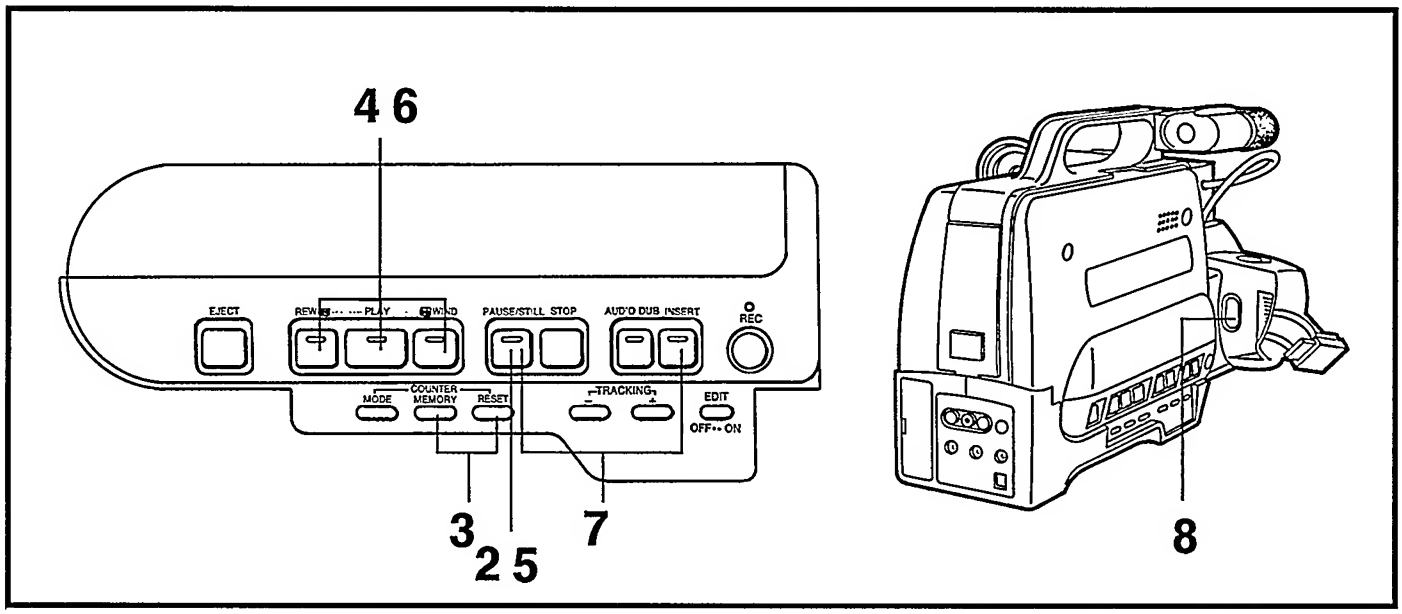

1 Insert the pre-recorded video cassette with intact erasure prevention tab.

2 Play back the tape to locate the point where the insert editing is to finish (edit-out point), and press the PAUSE/STILL button at that point.

3 Press the RESET button and then the MEMORY button. The indication "M0000" appears in the viewfinder (EVF).

4 Press the PLAY button and then the REW (REWind) button (Review mode) to locate the point where the insert editing is to start (edit-in point).

5 Press the PAUSE/STILL button at the point.

6 Move the exact recording start point by keeping the CUE/REVIEW button pressed (via the frame advance) and release it when the exact point has been reached.

7 While holding down the INSERT button, press the PAUSE/STILL button.
The Camcorder enters the insert editing mode, insert pause symbol appears in the viewfinder and the RECORD, INSERT and PAUSE/STILL LEDs on the Camcorder will be lit.

8 Press the recording start/stop or PLAY button.
Insert editing starts, then the insert symbol appears in the viewfinder, also the RECORD and INSERT LEDs on the Camcorder will be lit.

9 The insert editing will automatically finish at the point where the counter indicates "M0000" and the Camcorder enters the play mode.

Note:
In case the optional VITC generator has been used. When using insert editing techniques while shooting a tape, the user has to be aware that fully automatic editing by means of the optionally available editor IHP6803/6804, for almost professional quality editing is impossible due to the interrupted VITC data.

Audio dubbing

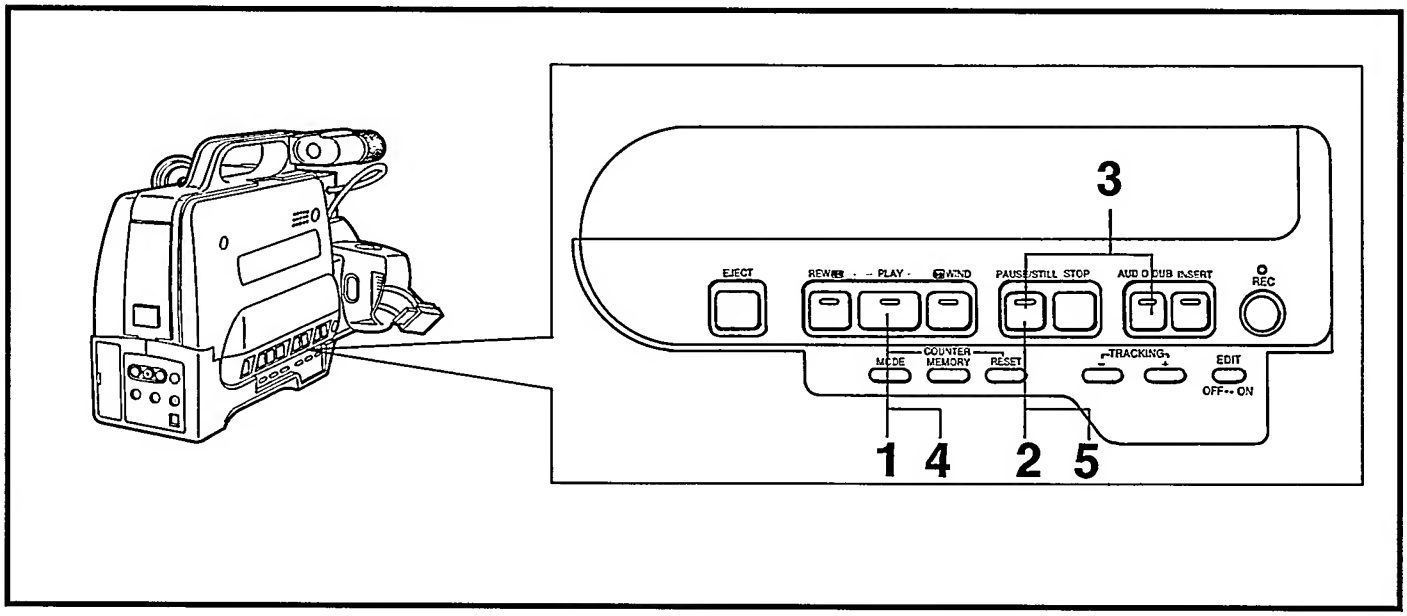

Audio dubbing means recording a new sound track onto a prerecorded cassette tape, i.e., replacing the original sound with new audio material.

Preparations

- Connect an audio source to either AUDIO IN or the microphone. When AUDIO IN on the Camcorder is used, the microphone will switch off automatically.
- Turn the power of the Camcorder and other connected equipment on.
- Insert the appropriate cassette tape into the Camcorder.

1 Playback the Camcorder's cassette tape and locate the point where you wish to start audio dubbing. You can use the high-speed playback function to locate this more quickly.

2 Press the PAUSE/STILL button at the desired point to start audio dubbing.

3 While holding the AUDIO DUB (DUBbing) button pressed down, press the PAUSE/STILL button. The AUDIO DUB (DUBbing) and PAUSE/STILL indicators light, then Camcorder enters the audio dubbing standby mode.
The Audio dubbing pause symbol will appear in the viewfinder.

4 When ready with the new audio source, press the recording start/stop or PLAY button to start the audio dubbing.
The AUDIO DUB LED will be lit and the audio dubbing symbol will appear in the viewfinder.

5 Press the PAUSE/STILL button to engage the audio dubbing standby mode or press the STOP button to stop audio dubbing mode.

Tape dubbing

Dubbing on to a second recorder

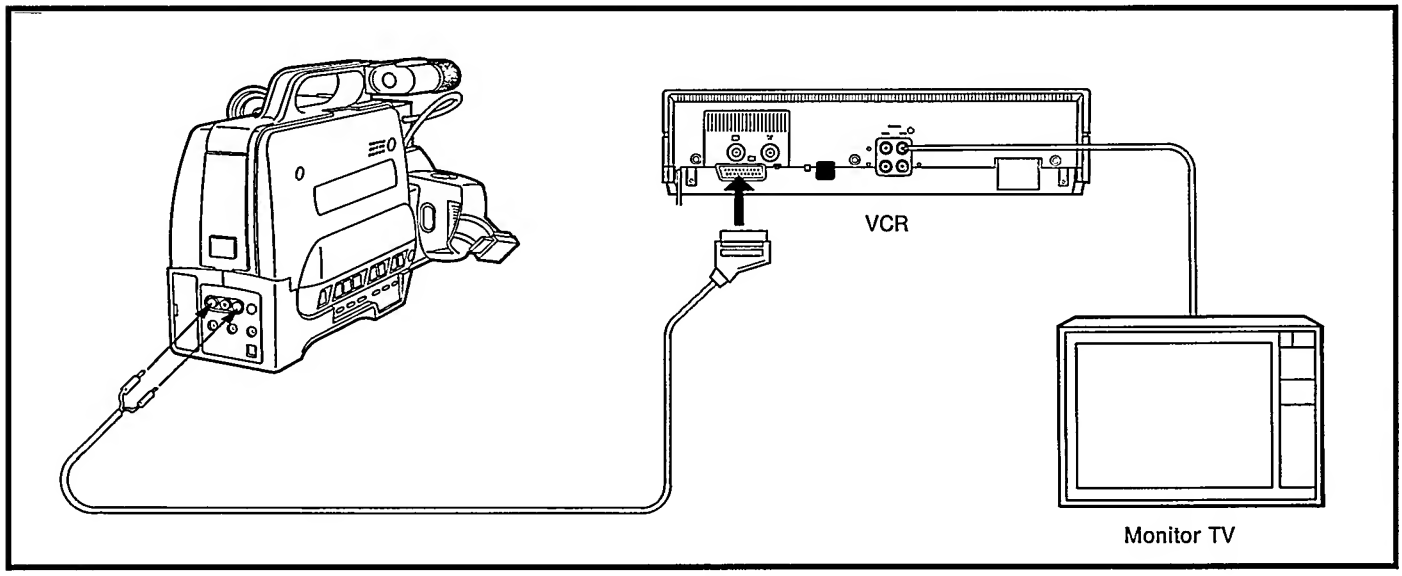

1 Make connections according to the diagram above.

2 Turn on the power of all components, and insert a prerecorded tape into the Camcorder and blank tape into the second recorder.

3

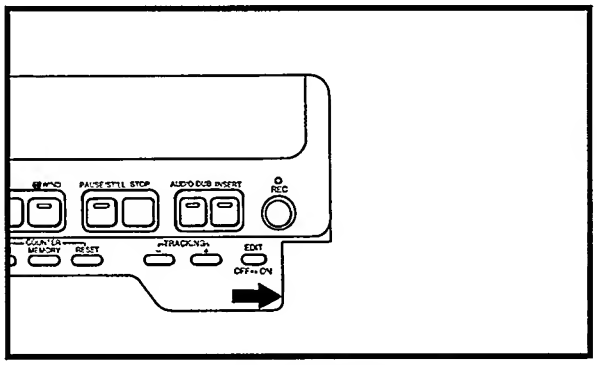

Set the EDIT ON/OFF switch to ON.

4 Put the second recorder into recording pause mode, and press the PLAY button on the Camcorder to find a dubbing start point.
When you find the dubbing start point, press the PAUSE/STILL button on the Camcorder.

5 Press the recording start button on the second recorder to enter recording mode, and simultaneously press the PLAY button on the Camcorder to start dubbing.

6 To edit out unwanted part (scene), engage the recording pause mode on the second recorder.

Supplemental information

What is "colour temperature"?

Light is composed of various colour components in different proportions. A relationship exists between the temperature of a light source and the colour components of the emitted light; as the temperature rises, the colour of the light varies from red, orange, yellow, white to blue in that order. "Colour temperature" is a value that expresses the differences in colour among light sources, measured in Kelvin. Bluish light has a higher colour temperature than reddish light.

What is "white balance"?

Making the colours look natural on TV is what white balance is all about. Because a camera is not as adaptable as the human eye, if a light source is reddish, white subjects in that light are recorded as reddish. White balance adjustment is performed to compensate for colour temperature variations of light so that whites are reproduced as white. Correct white balance makes all other colours correct. This Camcorder can perform automatic white balance adjustment in the fully automatic mode. However, if illumination is insufficient, white balance adjustment cannot be performed. To obtain correct colours, therefore, sufficient illumination is essential.

What is "illuminance"?

"Illuminance" is the intensity or brightness reflected, which is expressed in lux. This Camcorder is designed to provide best pictures under the conditions of a 700-lux illuminance, although shooting is possible all the away down to 9 lux. To obtain good pictures in very bright light, the use of an ND (neutral density) filter is recommended. (See the chart on the right.)

How to get good colour pictures

The simplest way is to provide sufficient lighting (close to the camera's reference illuminance) and accurately adjust the camera to the colour temperature of that lighting. If light sources of different colour temperatures are used together, accurate white balance adjustment is very difficult. For example, if natural light is mixed with artificial light, which is likely to occur next to windows, correct colours of the subject are difficult to obtain. It is recommended in such cases that curtains in the room be closed to shut out light from the outside. Also, when artificial lighting devices are used, they should all have the same colour temperature. For example, it is recommended that incandescent or halogen lamps not be used together with fluorescent lighting.

Colour temperatures of various artificial lighting

Type of illumination		Colour temperature
Tungsten lamp for home use		2,800 K
Tungsten lamp for photographic use		3,200 K
Quartz-halogen lamp		
Blue lamp for photographic use		5,000 K
Fluorescent lamp	Warm white	3,500 K
	White	4,500 K
	Daylight type	6,500 K

Illuminance chart

- The values on this chart are approximated to give you a rough reference.

	Unit: Lux	
ND filter desired	100,000 –	• Clear sky, mid-day, under sunlight (100,000)
		• Clear sky (10:00 a.m.) under sunlight (65,000)
Range for practical use		• Clear sky (3:00 p.m.) under sunlight (35,000)
		• Cloudy sky (mid-day) under sunlight (32,000)
		• Cloudy sky (10:00 a.m.) under sunlight (25,000)
	10,000 –	
		• By the window during the afternoon (3,500)
	2,000 –	• Cloudy sky (one hour after sunrise) (2,000)
	1,000 –	• Clear sky (one hour before sunset) (1,000)
	600 –	• Counters at department stores (500 — 700)
Lighting desired	500 –	• Bowling centre (500)
		• Office under fluorescent light (400 — 500)
		• Library (400 — 500)
		• Direct light from a flashlight at 1 m distance (250)
	100 –	• Streetlights at night (150 — 200)
	80 –	
	Minimum lighting for an object	
	15 –	• Cigarette lighter (at a distance of 30 cm)
	10 –	• Candlelight (at a distance of 20 cm) (10 — 15)

VITC generator IHP6805/02

This Camcorder is designed to receive VITC signals by using a separate VITC generator IHP6805/02 (optional). If you record with the VITC generator, you can enjoy very precise (frame by frame) and convenient editing afterwards by using the video editor which consists of control module IHP6803 (optional) and memory module IHP6804 (optional).
Please refer to the direction for user's of the video editor.

Attaching the VITC generator

Use the adaptor cable 22AV5193 provided with the VITC generator.

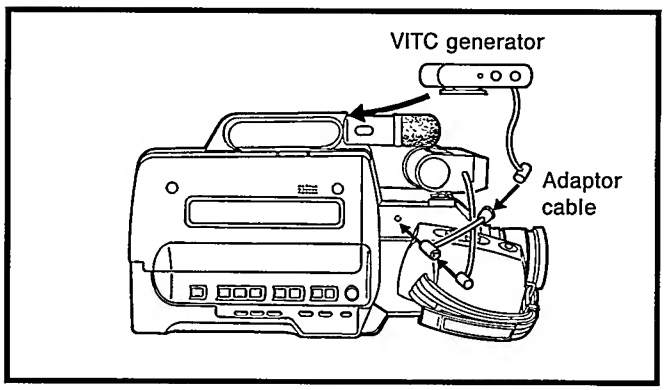

1 Attach the VITC generator to the accessory shoe.

2 Make connection according to the diagram above.

Note:
Other versions of the VITC generator (IHP6805/01) cannot be used with this Camcorder because of its different operating voltage.

The procedure to edit your video tape

1

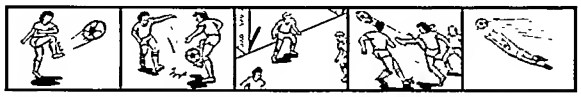

Assess the quality of your original shots (inspection of recorded tape).

2

Select the successful tape passage (scenes). This is called cutting.

3

Assemble the selected passage (scenes) to make the recording.

Note:
Please take care not to loose the adaptor cable, as this cable is necessary to use the VITC generator.

Character generator 22AV5156

The use of a character generator makes it possible to record titles, time, date and stopwatch while shooting some scenes.

Attaching the character generator

Before attaching the character generator, turn the Camcorder off with the power switch.

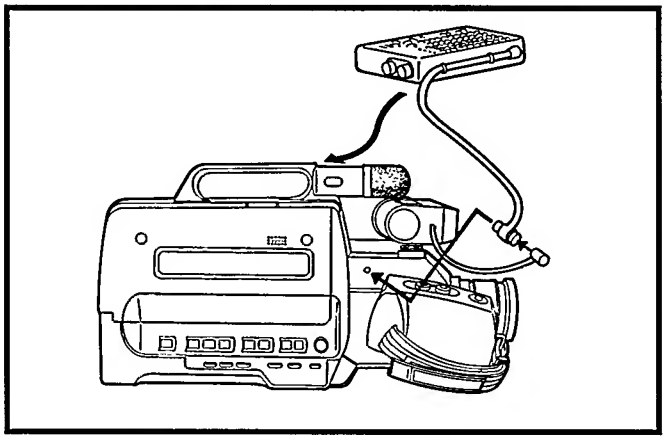

1. Attach the character generator to the accessory shoe.
2. Disconnect the electronic viewfinder cable.
3. Make connections according to the diagram above.

Note:
For the operation of the character generator, refer to the operating instructions of the character generator.

External microphone SBC3070

To use another microphone, connect the external microphone to EXT. MIC jack.

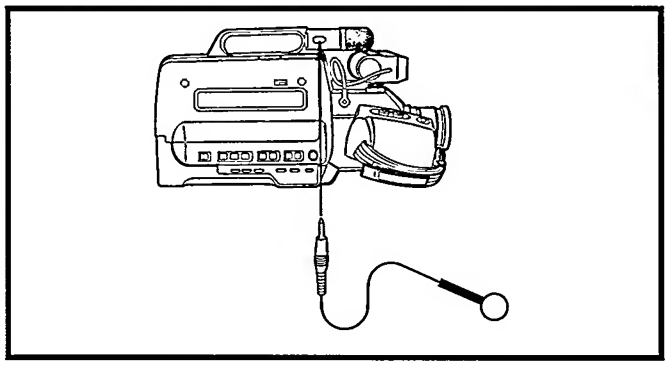

Tripod mounting

Align the screw and camera direction stud of the tripod with the Camcorder's tripod mounting socket and stud hole, and firmly tighten the screw.

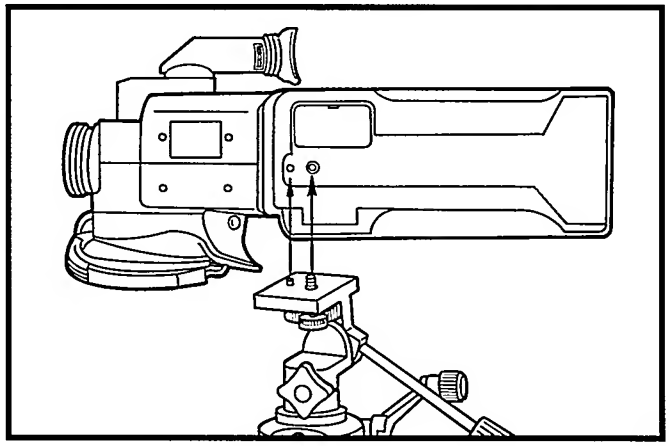

In case of difficulty

What may initially appear to be trouble is not always a real problem. Make sure first.

Symptoms	Check points
Power	
No power is supplied.	• Is the battery pack correctly installed? • Is the battery pack charged? • Is the power supply unit correctly connected?
Recording	
Recording is impossible.	• Check to see if the cassette safety tab is in place. See page 13.
Picture colours greatly differ from actual subject colours.	• If in the manual white balance mode, check the setting of the W. BALANCE button.
No sound is recorded.	• Is a microphone connected?
Recording does not start.	• Have you pressed the REC button first?
Playback	
Tape is running, but no playback picture appears.	• Is the TV/VIDEO switch of the RF converter set to VIDEO? • Is the TV receiver set to your video channel?
Playback picture is blurred or interrupted.	• Video heads may be dirty or worn out. For head cleaning or replacement, consult qualified service personnel.
Tape transport	
Tape stops during fast forwarding or rewinding.	• Is the "M" indication visible in the viewfinder? If so, press the COUNTER MEMORY button to cancel the memory function.
Rewinding or fast forwarding is impossible.	• Check to see if the tape has already been fully wound on to one reel or the other.
Other problems	
No function is available with more than two mode indicators lit.	• If this should happen when using power supply units other than the battery pack, turn their POWER switch on and off. With a battery pack, replace it with another charged one.
Vertical white lines appear when shooting a very bright object.	• This may occur when the background contrasts very much with the object. This is normal.

The Camcorder is a microcomputer-controlled device. External noise and interference might prevent it from functioning properly. In such cases, first disconnect its power supply unit (battery pack, AC power adapter, etc.); and then reconnect it and proceed as usual from the beginning.

General note

If the recording or playback quality decreases, it might be that the video heads are dirty.
Please consult your dealer for cleaning the heads.

Specifications

Format	: VHS-HQ standard
Power source	: DC 12 V
Power consumption	: 10.5 W
Signal system	
Luminance	: CCIR
Chrominance	: PAL
Video recording system	: Rotary, two-head helical scan system
Cassette tape	: VHS video cassette
Tape speed	: 23.39 mm/sec
Maximum recording time	: 240 min. with E-240 video cassette 180 min. with E-180 video cassette

VIDEO

Output	: 1.0 Vp-p, 75 ohms, unbalanced
Input (/00 only)	: 0.5 to 2.0 Vp-p, 75 ohms, unbalanced
S/N ratio	: 47 dB (WTD)
Horizontal resolution	: 240 lines

AUDIO

Output level/impedance	: –6 dBs/less than 1 kohm, unbalanced
Input level/impedance	: –8 dBs/more than 50 kohms, unbalanced
Microphone input	: –68 dBs/high impedance switchable for flat response
S/N ratio	: More than 40 dB
Frequency response	: 70 to 10,000 Hz
Viewfinder	: Electronic with 0.9" black/white CRT

CAMERA

Pick up	: Frame interline transfer (FIT) CCD, 420,000 pixels
Minimum required illumination	: 9 lux (at F1.6)
Illumination range	: 9 to 100000 lux
Lens	: F1.6, f= 8 to 80 mm, 10:1 variable-speed power zoom lens with macro position, filter diameter of 49 mm
Colour temperature switching	: Switchable 3,200 K – 4,200 K – 5,600 K
White balance adjustment	: Auto-tracking white balance
Iris	: Center weighted auto-iris with backlight compensation and manual override
Focus	: Video inner lens auto-focus (switchable automatic/manual)
Variable speed shutter	: Switchable (1/50, 1/125, 1/250, 1/500, 1/1000 and 1/2000 second)
Exclusive microphone	: Omnidirectional condenser type

General

Operating temperature	: 0°C to 40°C
Operating humidity	: 20% to 80%
Storage temperature	: –25°C to 60°C
Dimensions	: 106 (W) x 182 (H) x 410 (D) mm
Weight	: 2.5 kg (Exclude battery)

AC adaptor (SBC5440)

Power requirement	: AC 100 to 240 V, 50/60 Hz
Power consumption	: 37 W
Output	: DC 13 V, 0.9 A (VCR mode)
Charging system	: DC 15V; 1.5 A Constant current, peak detection, time controlled
Dimensions	: 80 (W) x 50 (H) x 196 (D) mm
Weight	: 600 g

Design and specifications are subject to change without notice.

English

GB	IDENTITY CARD	This card, together with the terms of guarantee (to be provided by your dealer), forms the full certificate of guarantee for this appliance.
D	GERÄTE-KENNKARTE	Diese Karte ist, zusammen mit den Garantiebestimmungen, die Ihr Händler Ihnen aushändigt, Ihr Garantieschein für dieses Gerät.
F	CARTE D'INDENTIFICATION	Associée aux conditions de garantie (qui vous sont remises par le revendeur), cette carte constitue le certificat de garantie de cet appareil.
NL	INDENTIFICATIEKAART	Deze kaart vormt, samen met de garantievoorwaarden (welke door uw dealer verstrekt worden), het garantiebewijs voor dit apparaat.
I	CARTE D'IDENTIFICAZIONE	Questa cartolina rappresenta insieme alle condizioni di garanzia (da consegnare dal vostro rivenditore) il documento di garanzia per questo apparecchio.
E	TARJETA DE INDENTIFICACIÓN	La garantía de este aparato se compone de esta tarjeta y de las condiciones de garantía que le entregará su concesionario.
P	CARTÃO DE INDENTIFICAÇÃN	Este cartão, em conjunto com as condições de garantia em vigor (explicadas pelo seu vendedor) constituem o certificado de garantia do seu aparelho.
GR	ΔΕΛΤΙΟ ΤΑΥΤΟΤΗΤΑΣ	Η καρτέλλα αυτή μαζί με τους όρους εγγυήσεως (που θα προμηθευθείτε από το κατάστημα που αγοράσατε την συσκευή), αποτελούν το πλήρες πιστοποιητικό εγγυήσεως της συσκευής σας.

PHILIPS

Printed in Japan